APPENDIX E
HOURLY LINK CAPACITIES USED IN TRAFFIC MODEL PLOTS

DESCRIPTION OF LEVEL OF SERVICE METHODOLOGY

SIGNAL WARRANT ANALYSIS

DETAILS OF OPERATIONS ANALYSIS AT INTERSECTIONS

HOURLY LINK CAPACITIES USED IN TRAFFIC MODEL PLOTS

AUTO VOLUMES

emme/2

LINKS:
all

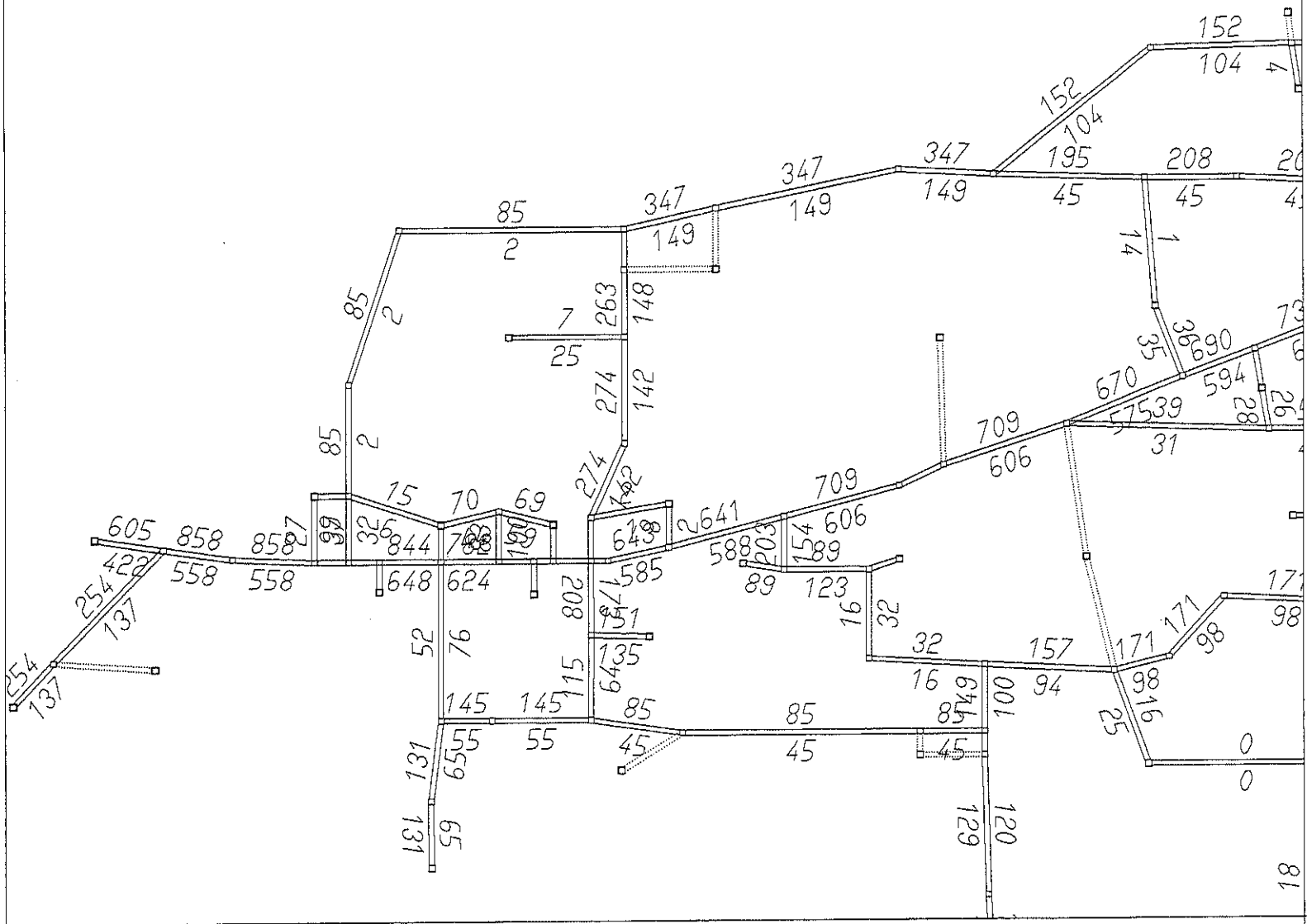

WINDOW A:
-218.1/ 360.94
162.08/ 646.06

EMME/2 PROJECT: CORVALLIS EMME/2 MODEL CONVERSION W/ PHILOMATH ADDITION
SCENARIO 1: 1991 PM PK HR - Modified BPR Curve

98-06-30 13:48
MODULE: 6.12
DAE.....bjd

AUTO VOLUMES

emme/2

LINKS:
all

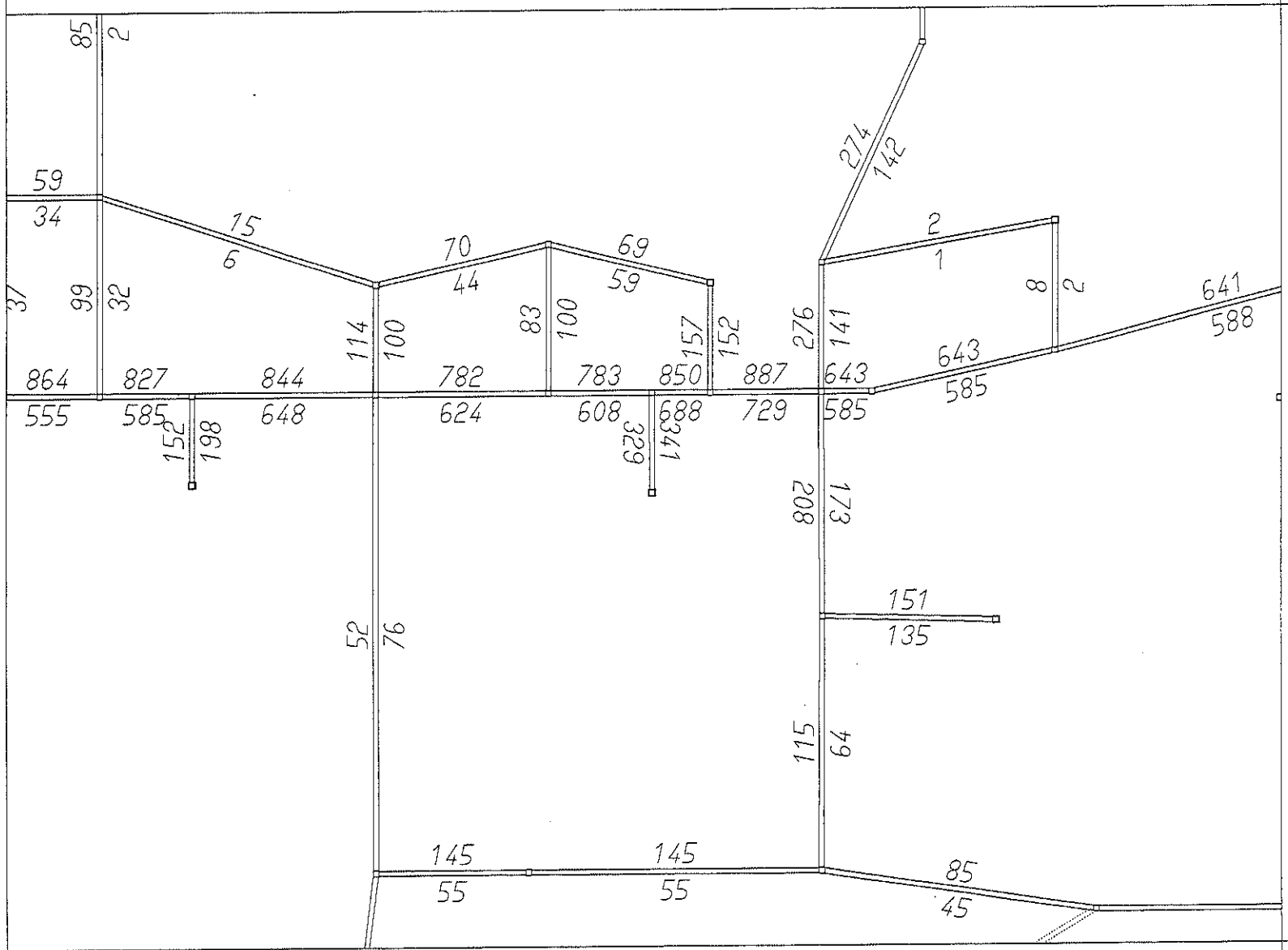

WINDOW B:
-127.1/ 413.52
-1.86/ 507.48

EMME/2 PROJECT: CORVALLIS EMME/2 MODEL CONVERSION W/ PHILOMATH ADDITION
SCENARIO 1: 1991 PM PK HR - Modified BPR Curve

98-06-30 13:49
MODULE: 6.12
DAE.....bjd

BASE NETWORK

ATTRIB. @VCRAT: VOLUME/CAPACITY RATIO

emme/2

LINKS:
all

THRESHOLD:
UPPER: 9990

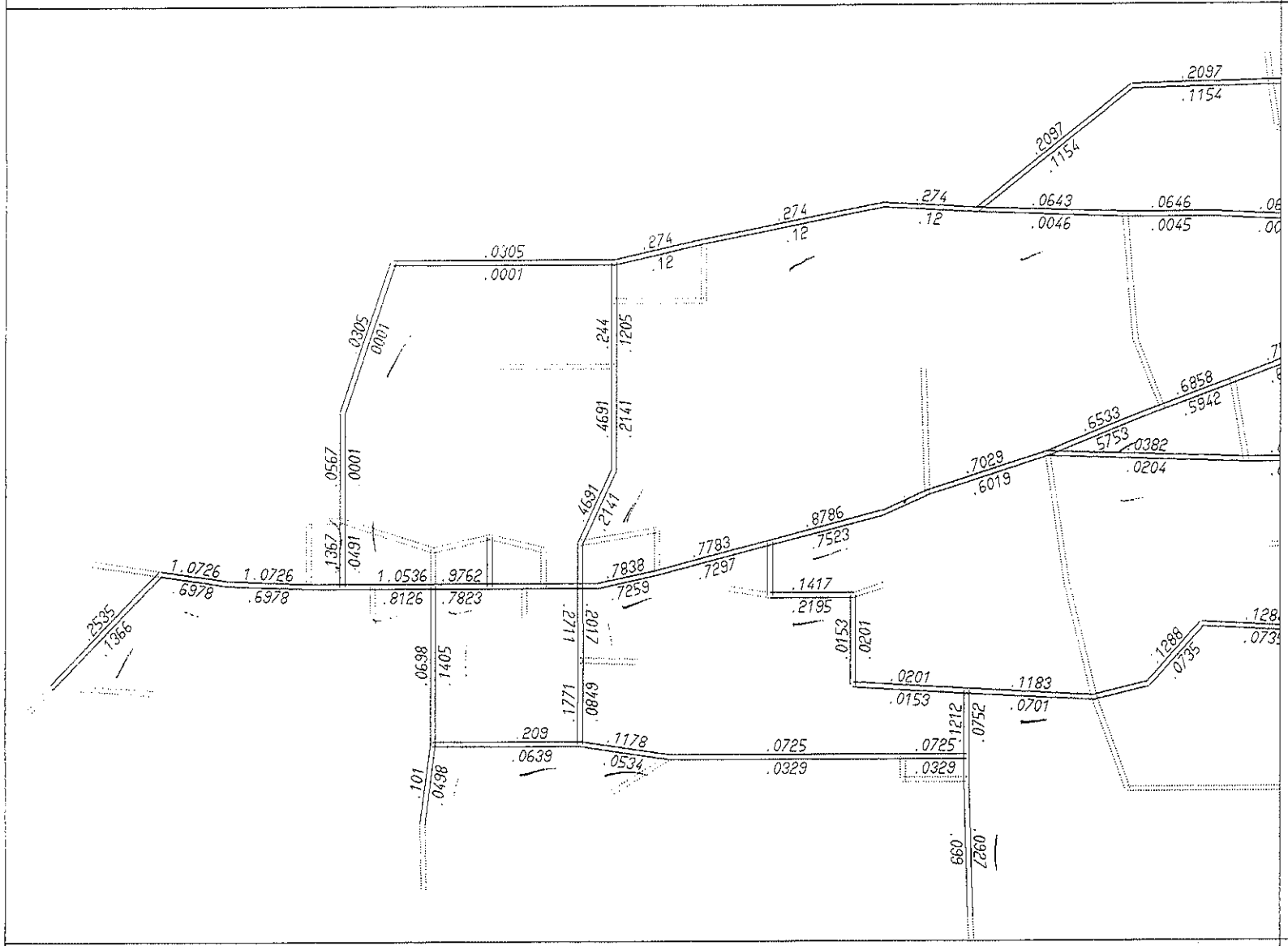

WINDOW A:
-218.1/ 360.94
162.08/ 646.06

EMME/2 PROJECT: CORVALLIS EMME/2 MODEL CONVERSION W/ PHILOMATH ADDITION
SCENARIO 1: 1991 PM PK HR - Modified BPR Curve
ATTRIB. @vcrat: Volume/Capacity Ratio

98-01-24 11:31
MODULE: 2.13
DAE.....bjd

BASE NETWORK

ATTRIB. @VCRAT: VOLUME/CAPACITY RATIO

emme/2

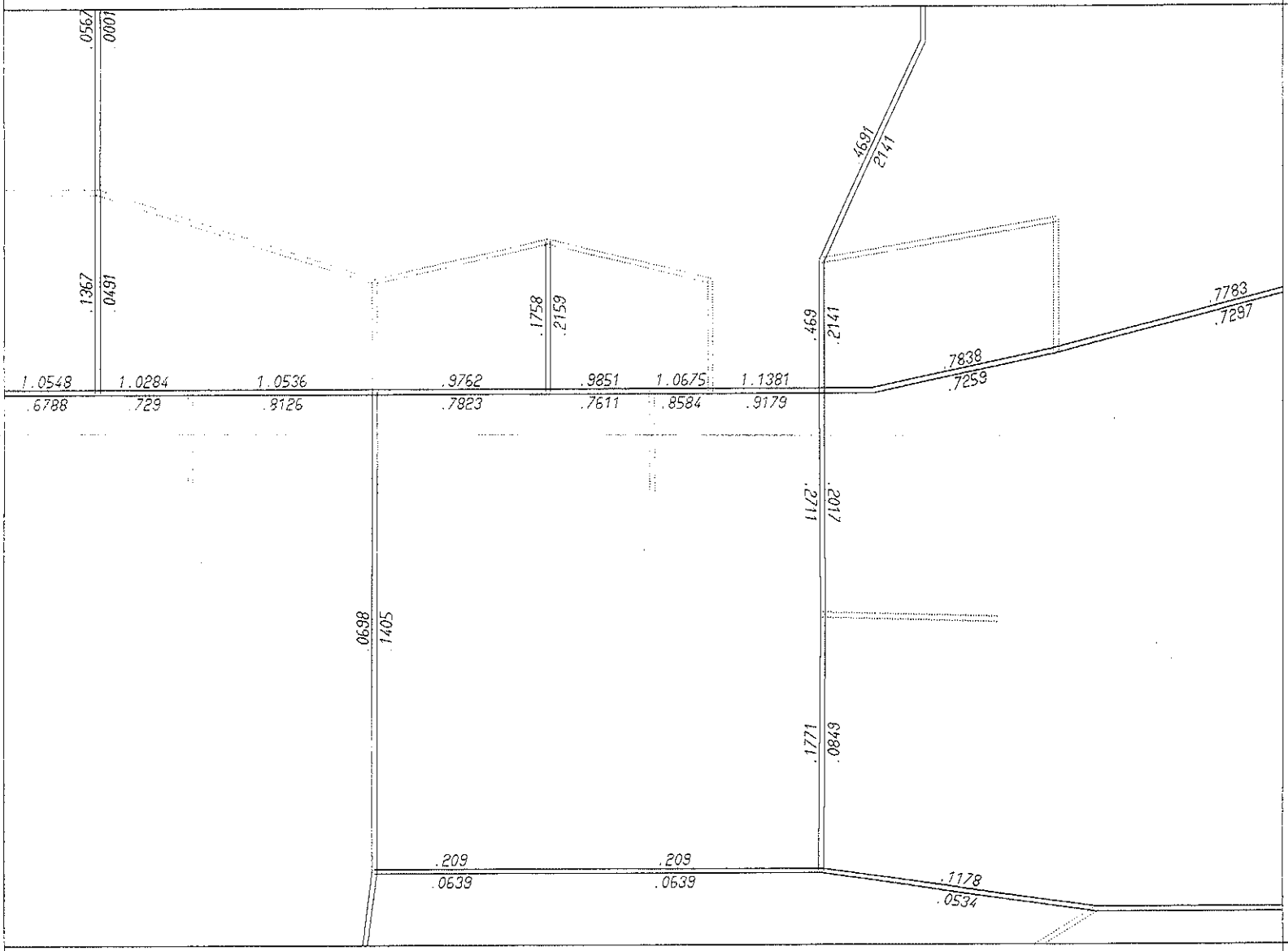

LINKS:
all

THRESHOLD:
UPPER: 9990

WINDOW B:
-127.1/ 413.52
-1.86/ 507.48

EMME/2 PROJECT: CORVALLIS EMME/2 MODEL CONVERSION W/ PHILOMATH ADDITION
SCENARIO 1: 1991 PM PK HR - Modified BPR Curve
ATTRIB. @vcrat: Volume/Capacity Ratio

98-01-24 11:32
MODULE: 2.13
DAE.....bjd

AUTO VOLUMES

emme/2

LINKS:
all

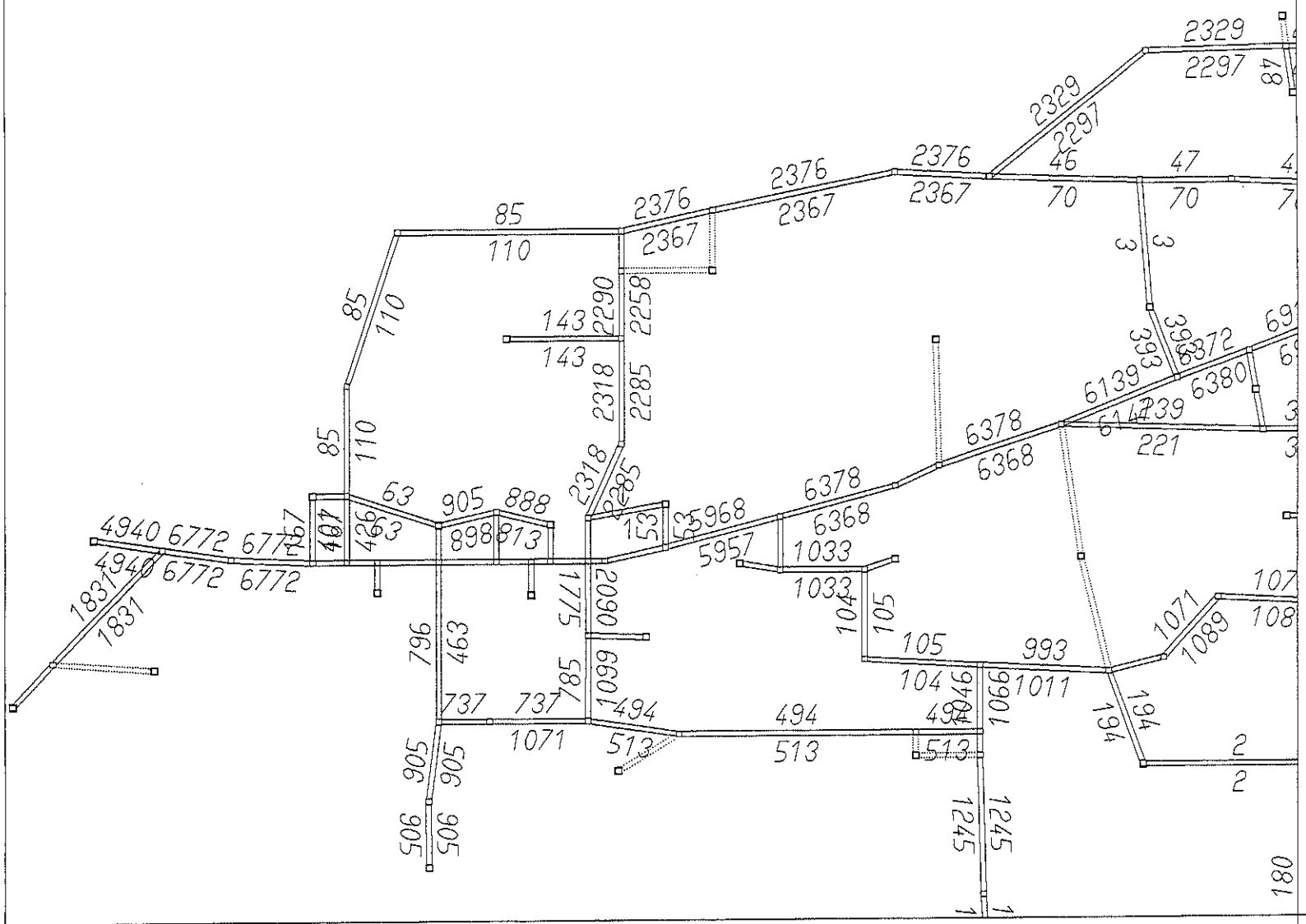

WINDOW A:
-218.1/ 360.94
162.08/ 646.06

EMME/2 PROJECT: CORVALLIS EMME/2 MODEL CONVERSION W/ PHILOMATH ADDITION
SCENARIO 2: 1991 Daily Model - Modified BPR Curve

98-06-30 13:49
MODULE: 6.12
DAE.....bjd

AUTO VOLUMES

emme/2

LINKS:
all

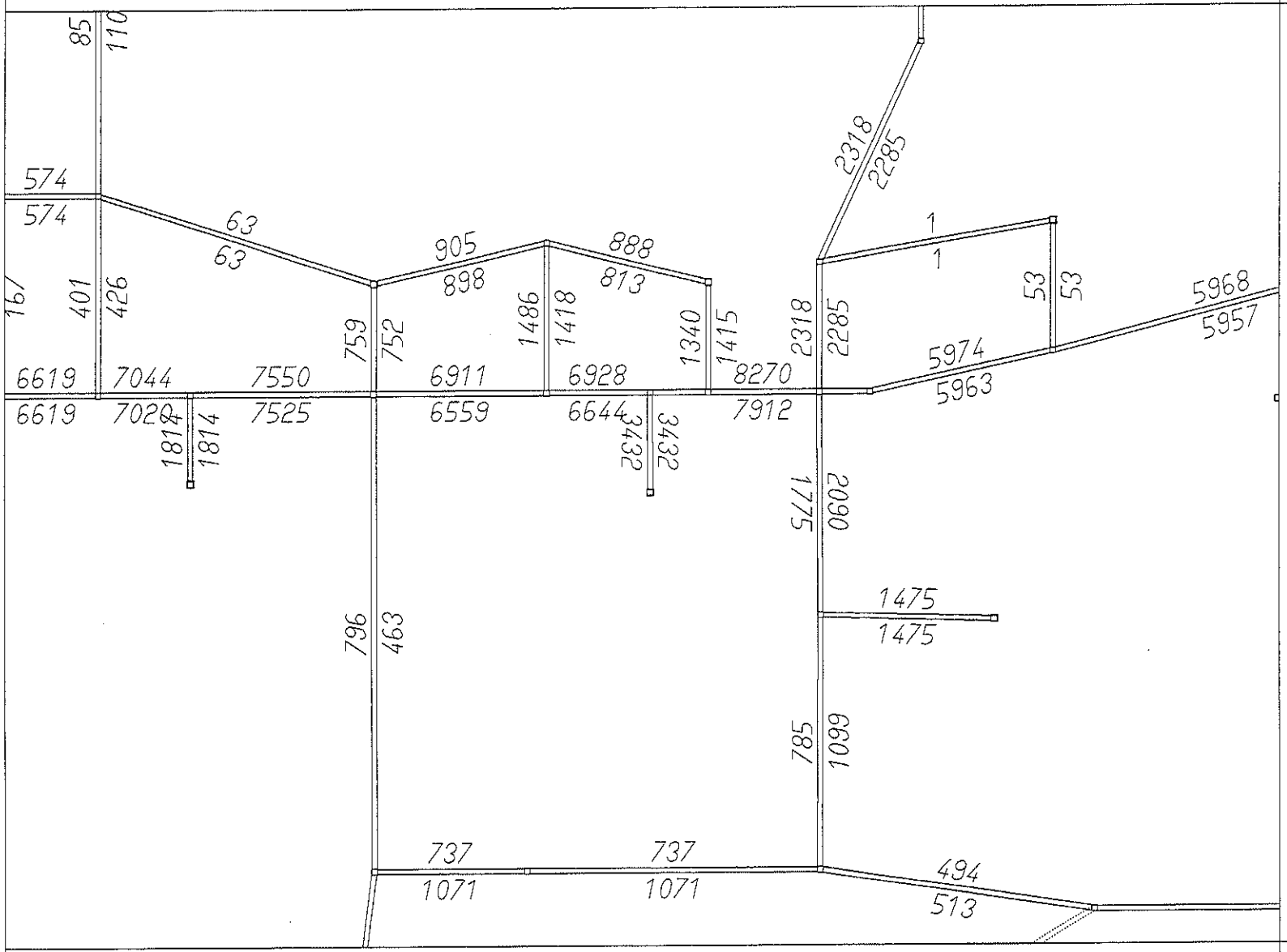

WINDOW B:
-127.1/ 413.52
-1.86/ 507.48

EMME/2 PROJECT: CORVALLIS EMME/2 MODEL CONVERSION W/ PHILOMATH ADDITION
SCENARIO 2: 1991 Daily Model - Modified BPR Curve

98-06-30 13:49
MODULE: 6.12
DAE.....bjd

AUTO VOLUMES

emme/2

LINKS:
all

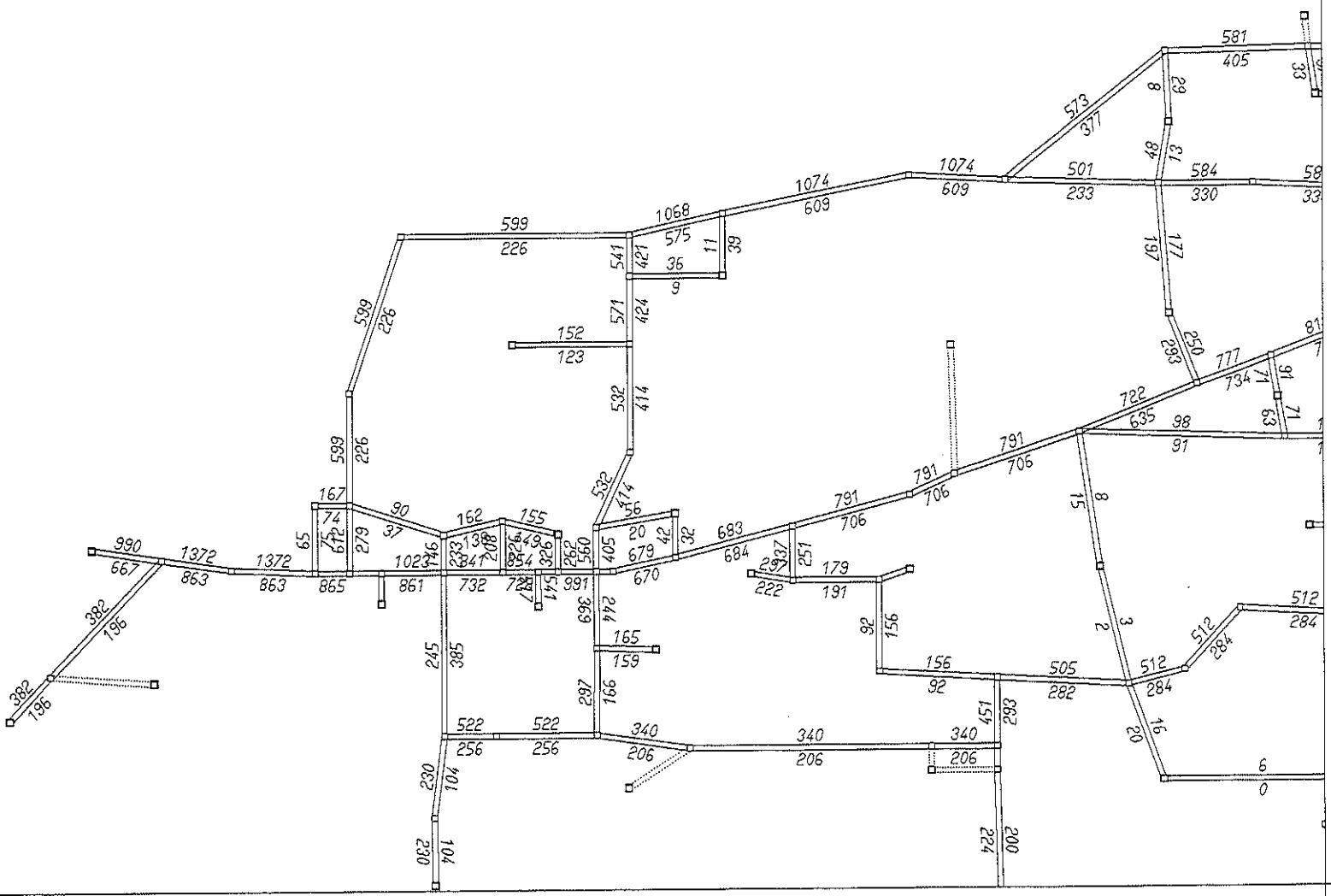

WINDOW A:
-224/375.402
162.96/665.598

EMME/2 PROJECT: Corvallis-Philomath Study Area (62.500 population)
SCENARIO 1: 2015- PM Peak Hour (No Build)

98-06-30 13:38
MODULE: 6.12
DAE.....bjd

AUTO VOLUMES

emme/2

LINKS:
all

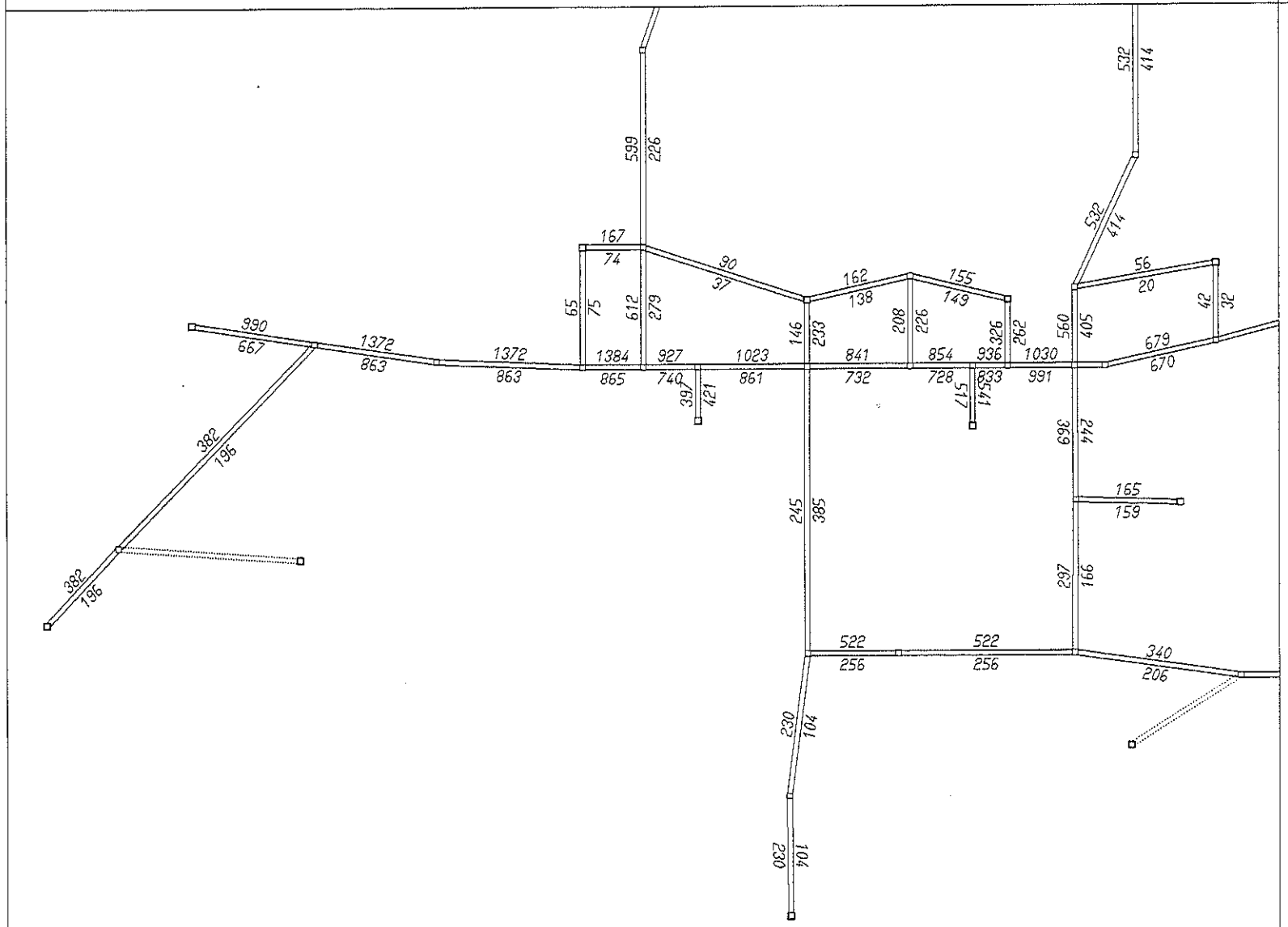

WINDOW B:
-222.2/372.876
-13.73/ 529.26

EMME/2 PROJECT: Corvallis-Philomath Study Area (62,500 population)
SCENARIO 1: 2015- PM Peak Hour (No Build)

98-06-30 13:38
MODULE: 6.12
DAE.....bjd

AUTO VOLUMES

emme/2

LINKS:
all

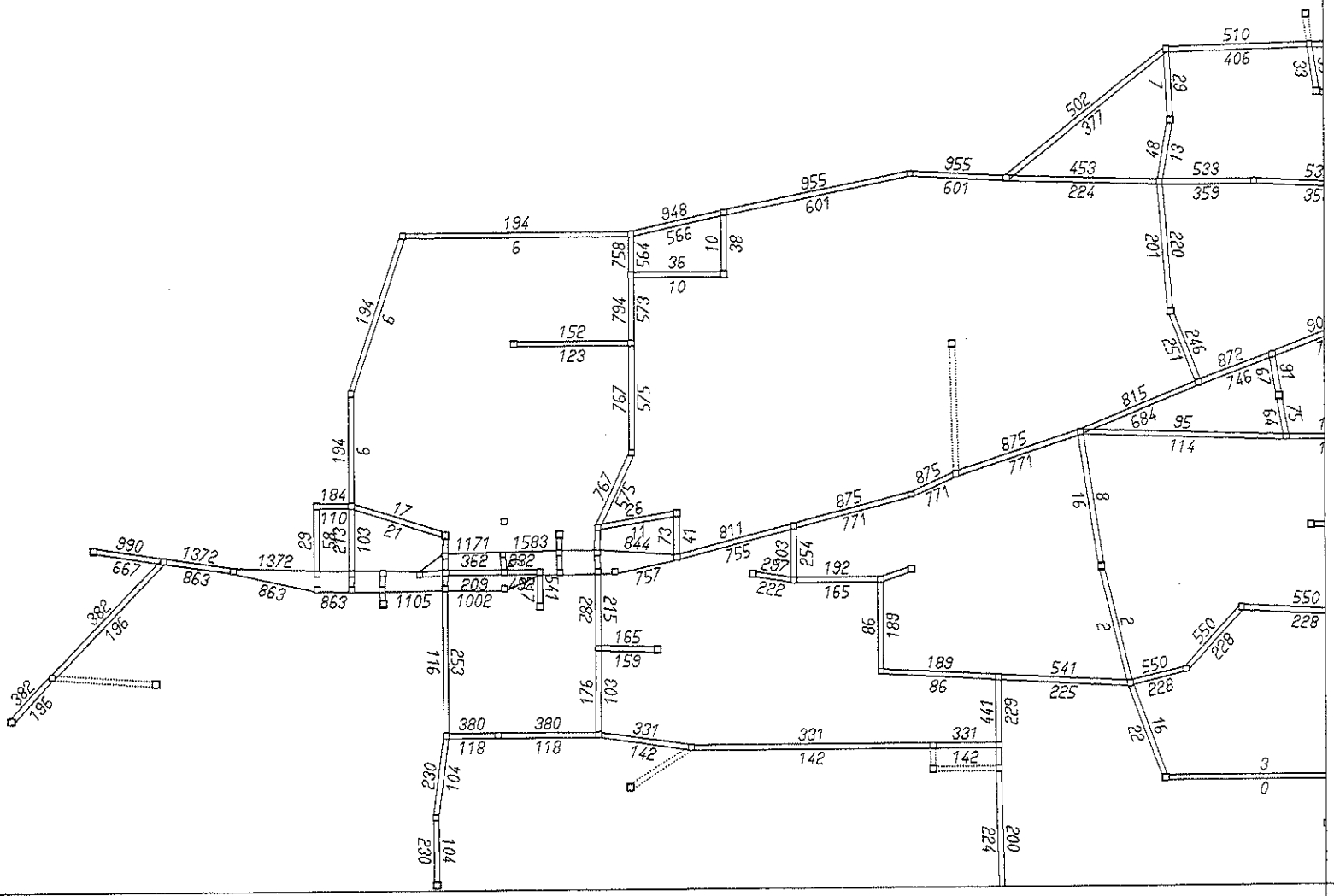

WINDOW A:
-224/375.402
162.96/665.598

EMME/2 PROJECT: Corvallis-Philomath Study Area (62.500 population)
SCENARIO 40: 2015- One Way Couplet

98-06-30 13:41
MODULE: 6.12
DAE.....bjd

AUTO VOLUMES

emme/2

LINKS:
all

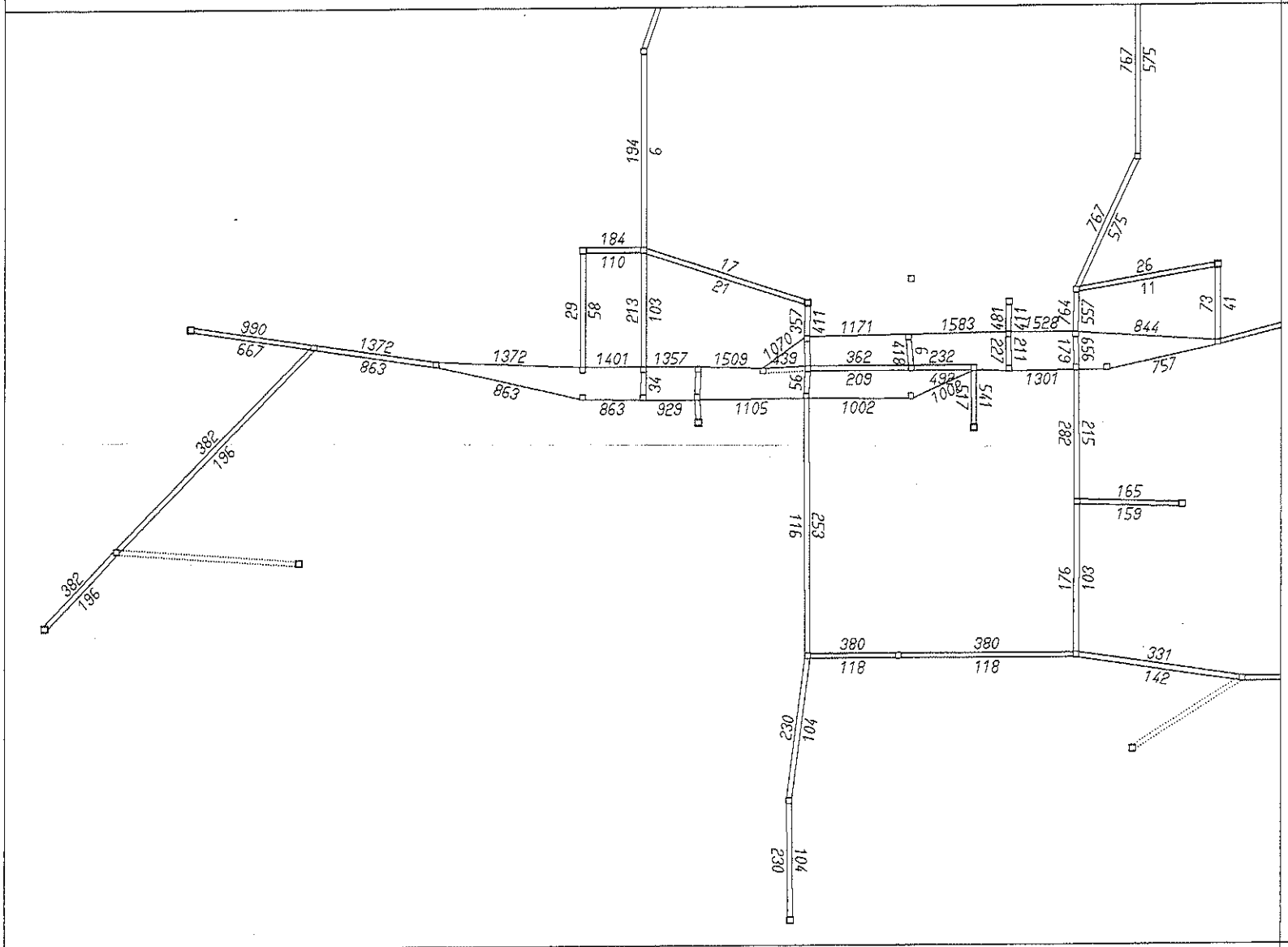

WINDOW B:
-222.2/372.876
-13.73/ 529.26

EMME/2 PROJECT: Corvallis-Philomath Study Area (62.500 population)
SCENARIO 40: 2015- One Way Couplet

98-06-30 13:41
MODULE: 6.12
DAE.....bjd

AUTO VOLUMES

emme/2

LINKS:
all

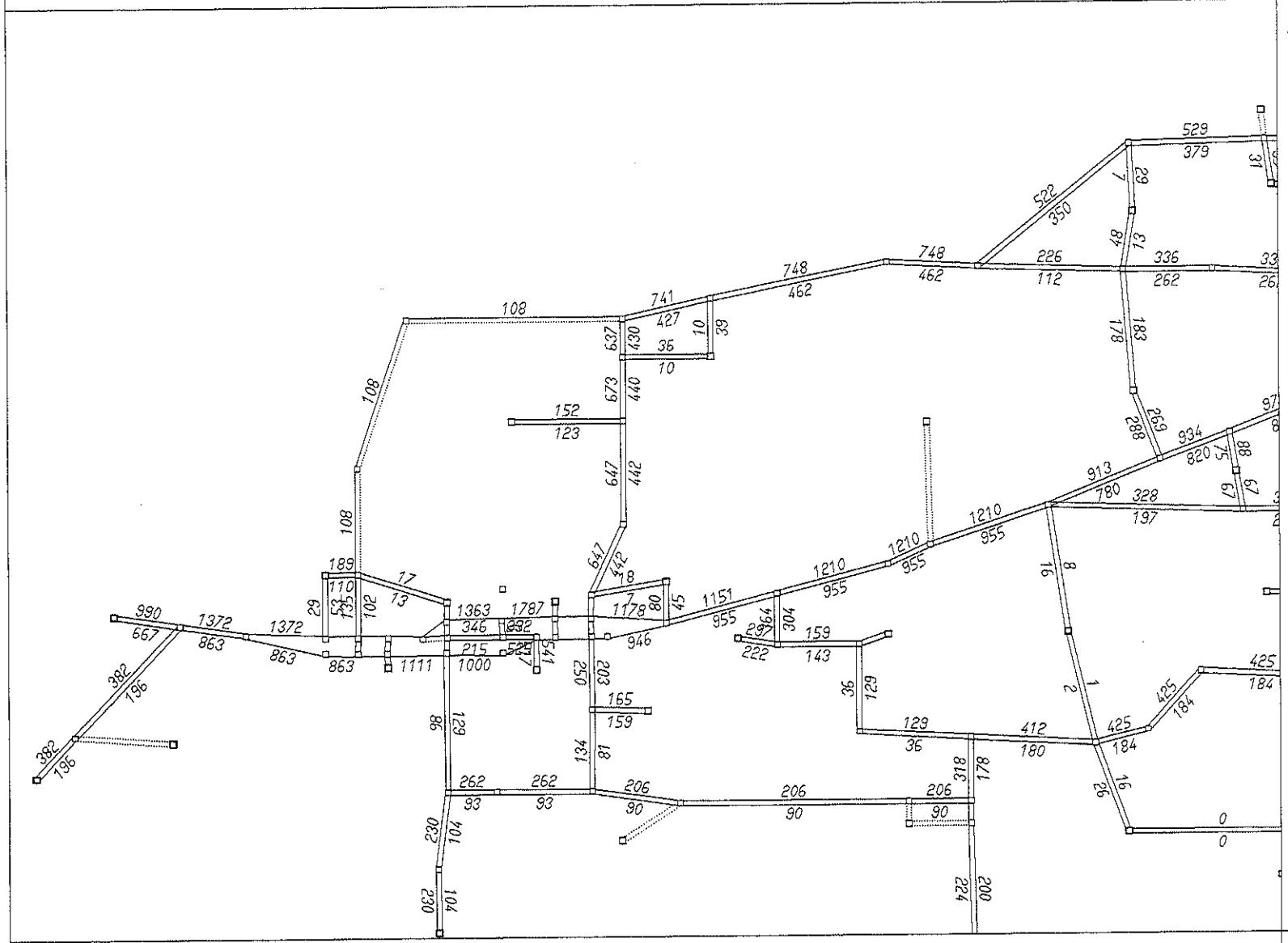

WINDOW A:
-224/375.402
162.96/665.598

EMME/2 PROJECT: Corvallis-Philomath Study Area (62,500 population)
SCENARIO 41: 2015- One Way Couplet W/Addl. Cap. Imp.

98-06-30 13:43
MODULE: 6.12
DAE.....bjd

AUTO VOLUMES

emme/2

LINKS:
all

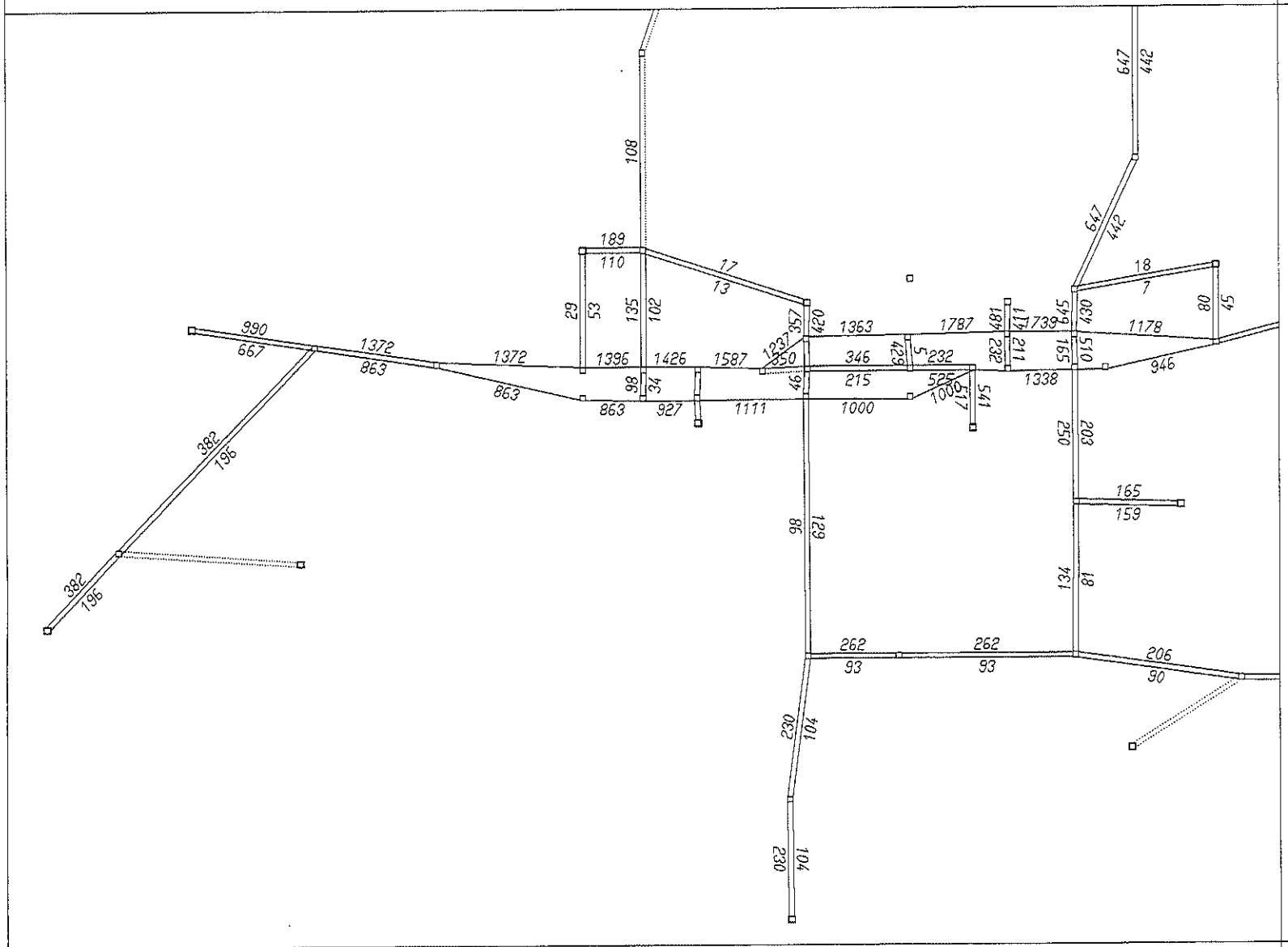

WINDOW B:
-222.2/372.876
-13.73/ 529.26

EMME/2 PROJECT: Corvallis-Philomath Study Area (62.500 population)
SCENARIO 41: 2015- One Way Couplet W/Addl. Cap. Imp.

98-06-30 13:43
MODULE: 6.12
DAE.....bjd

AUTO VOLUMES

emme/2

LINKS:
all

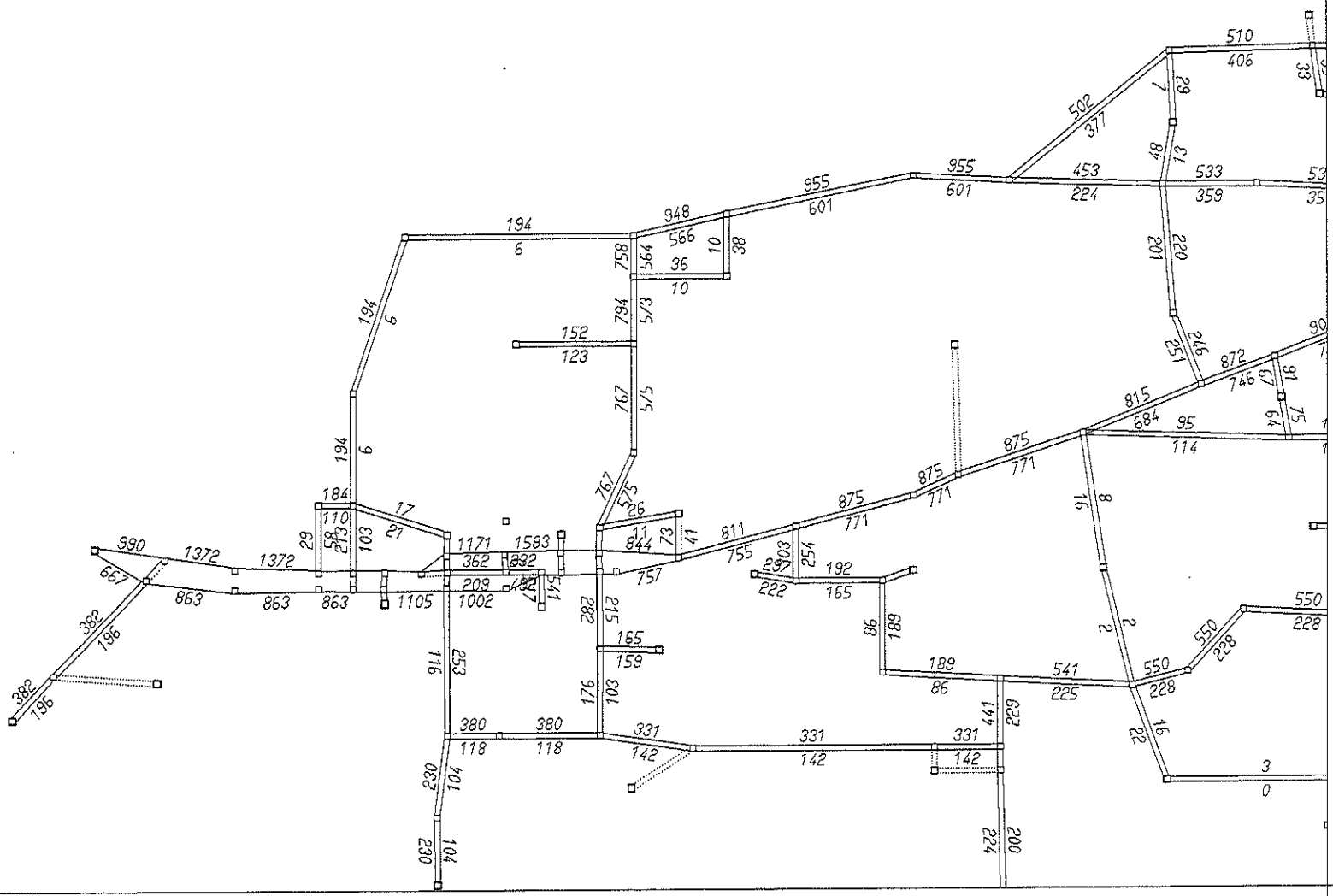

WINDOW A:
-224/375.402
162.96/665.598

EMME/2 PROJECT: Corvallis-Philomath Study Area (62.500 population)
SCENARIO 50: 2015- Extended One Way Couplet

98-06-30 13:44
MODULE: 6.12
DAE.....bjd

AUTO VOLUMES

emme/2

LINKS:
all

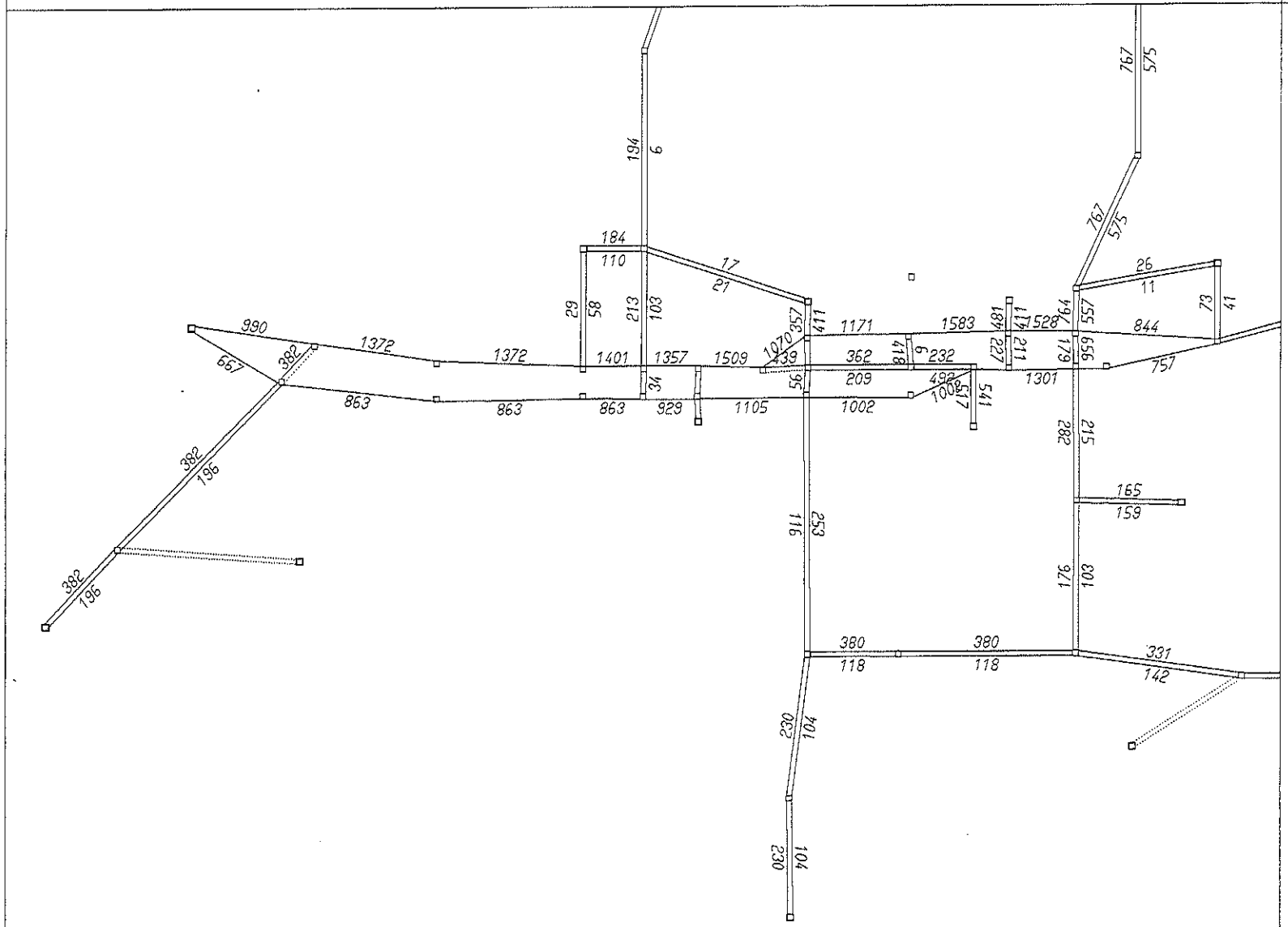

WINDOW B:
-222.2/372.876
-13.73/ 529.26

EMME/2 PROJECT: Corvallis-Philomath Study Area (62.500 population)
SCENARIO 50: 2015- Extended One Way Couplet

98-06-30 13:44
MODULE: 6.12
DAE.....bjd

AUTO VOLUMES

emme/2

LINKS:
all

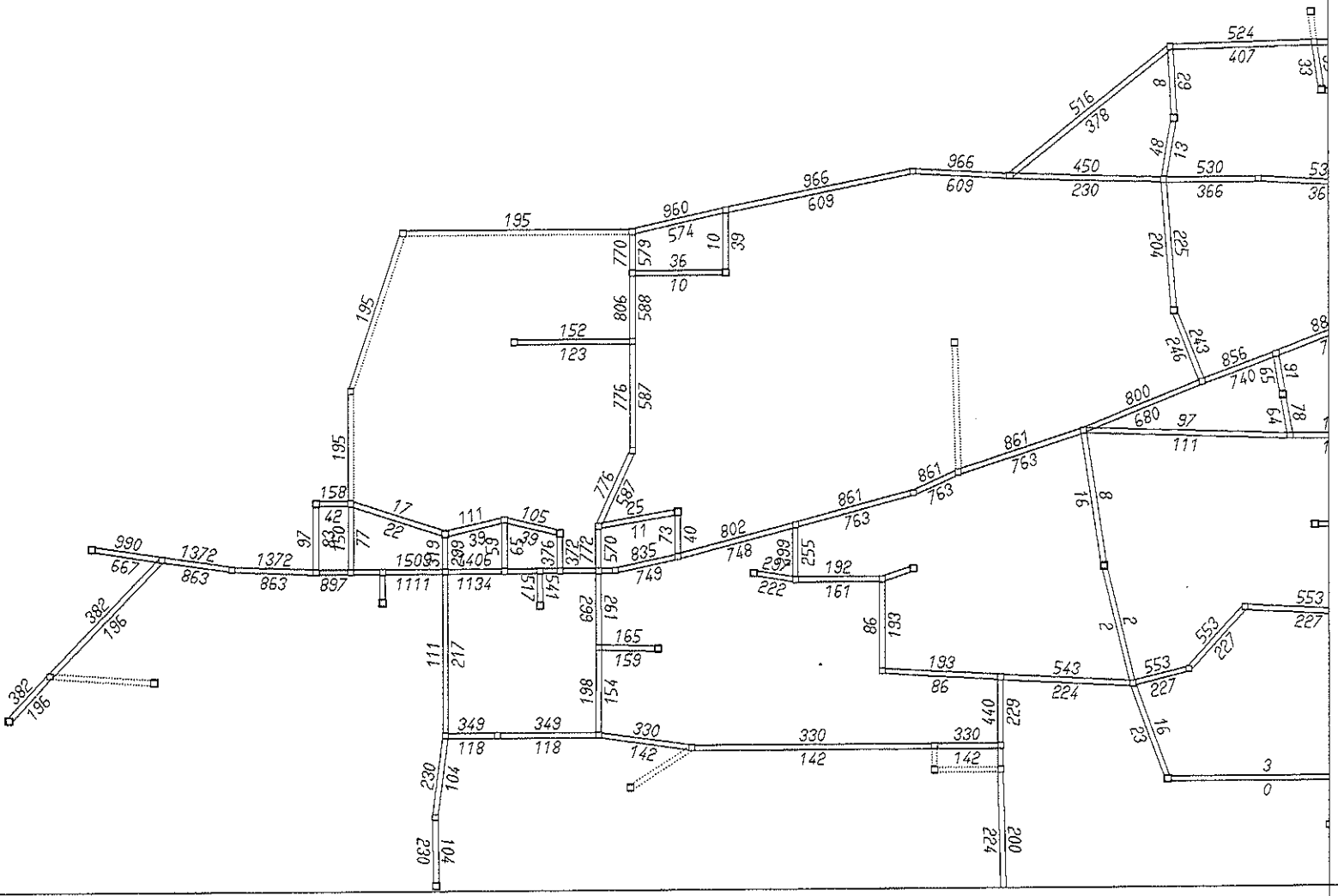

WINDOW A:
-224/375.402
162.96/665.598

EMME/2 PROJECT: Corvallis-Philomath Study Area (62,500 population)
SCENARIO 60: 2015- Widen Main St. to 5 Lanes

98-06-30 13:44
MODULE: 6.12
DAE.....bjd

AUTO VOLUMES

emme/2

LINKS:
all

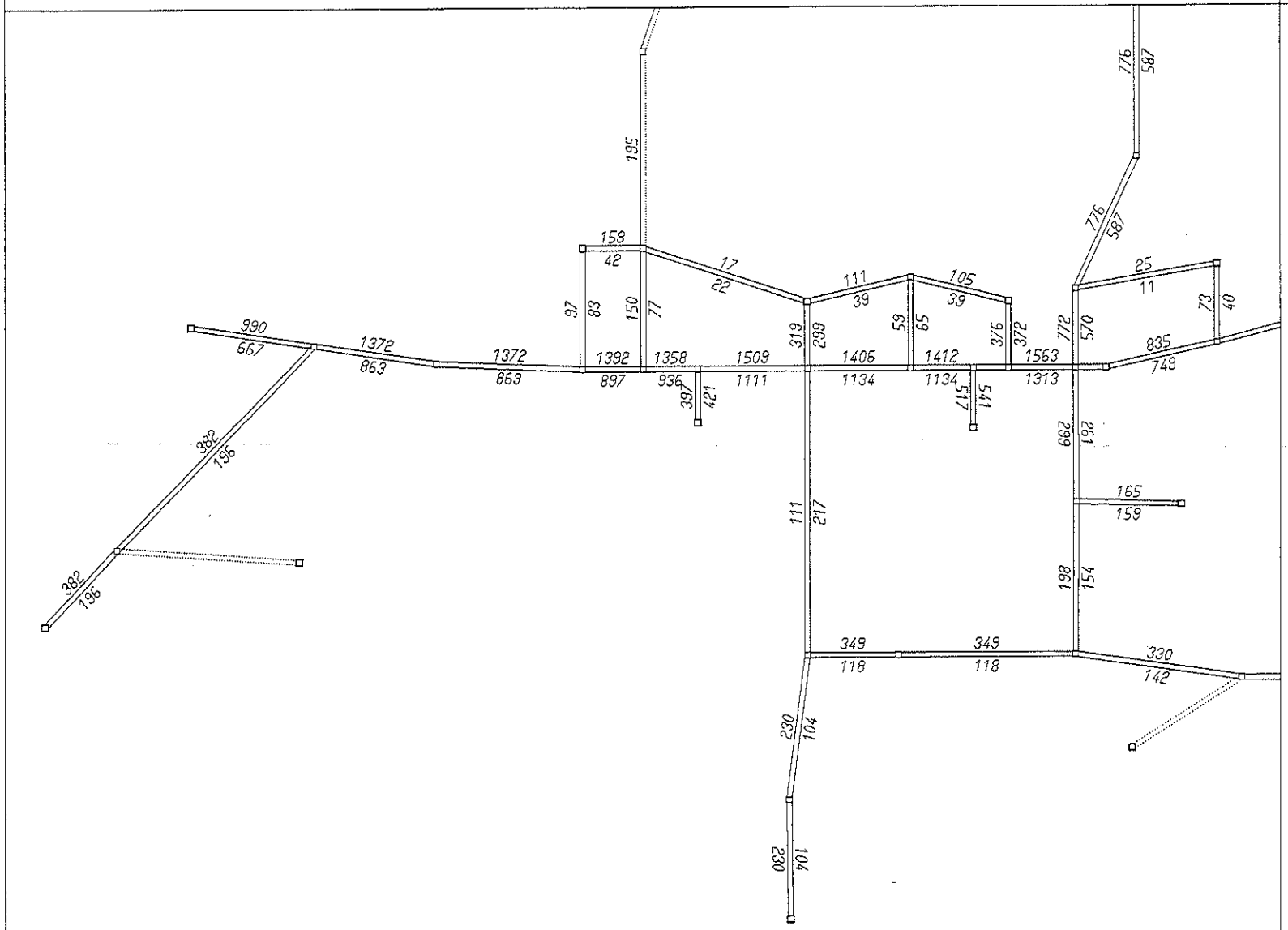

WINDOW B:
-222.2/372.876
-13.73/ 529.26

EMME/2 PROJECT: Corvallis-Philomath Study Area (62.500 population)
SCENARIO 60: 2015- Widen Main St. to 5 Lanes

98-06-30 13:44
MODULE: 6.12
DAE.....bjd

AUTO VOLUMES

emme/2

LINKS:
all

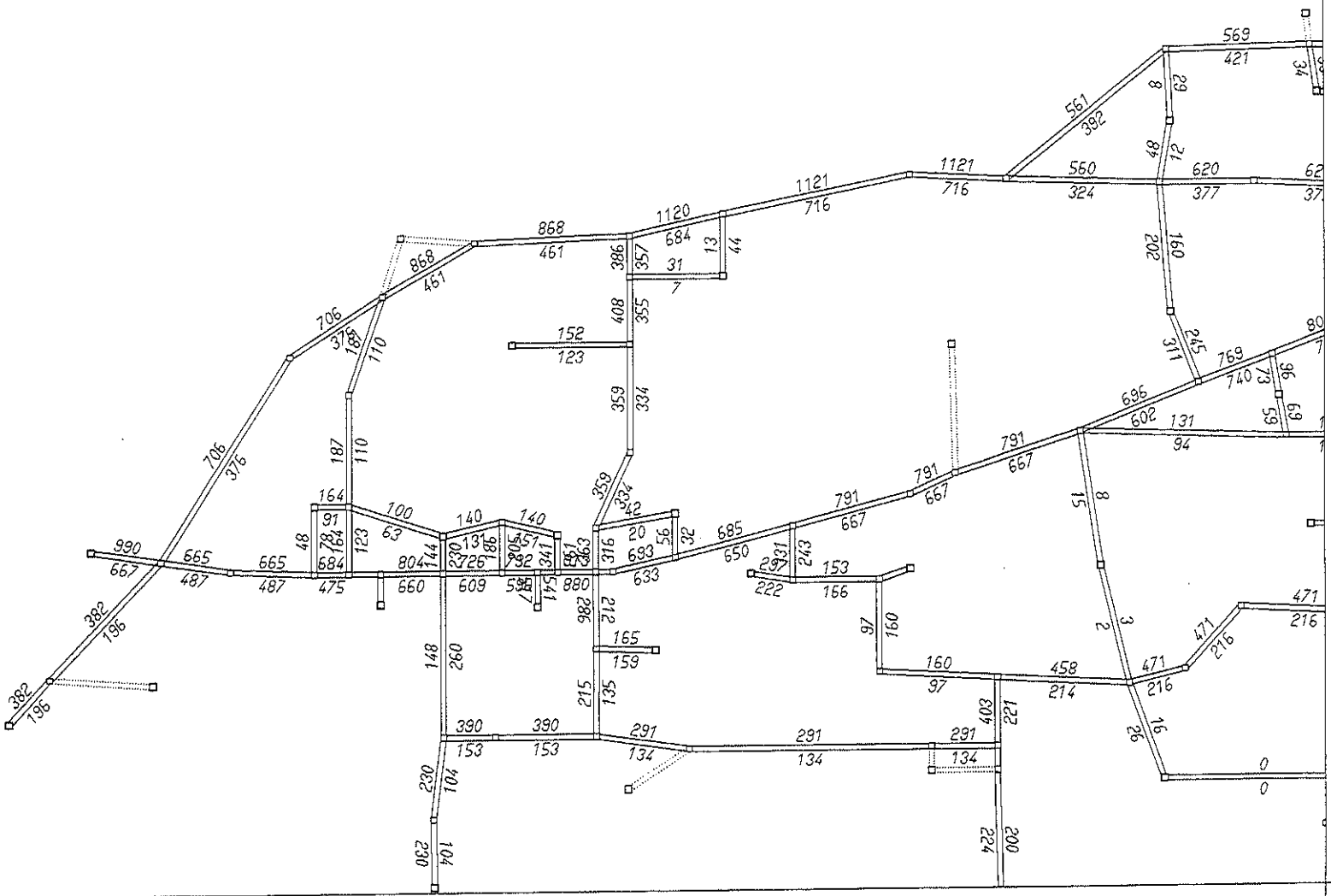

WINDOW A:
-224/375.402
162.96/665.598

EMME/2 PROJECT: Corvallis-Philomath Study Area (62.500 population)
SCENARIO 20: 2015- West Hills Rd. Extension

98-05-05 16:41
MODULE: 6.12
DAE.....bjd

AUTO VOLUMES

emme/2

LINKS:
all

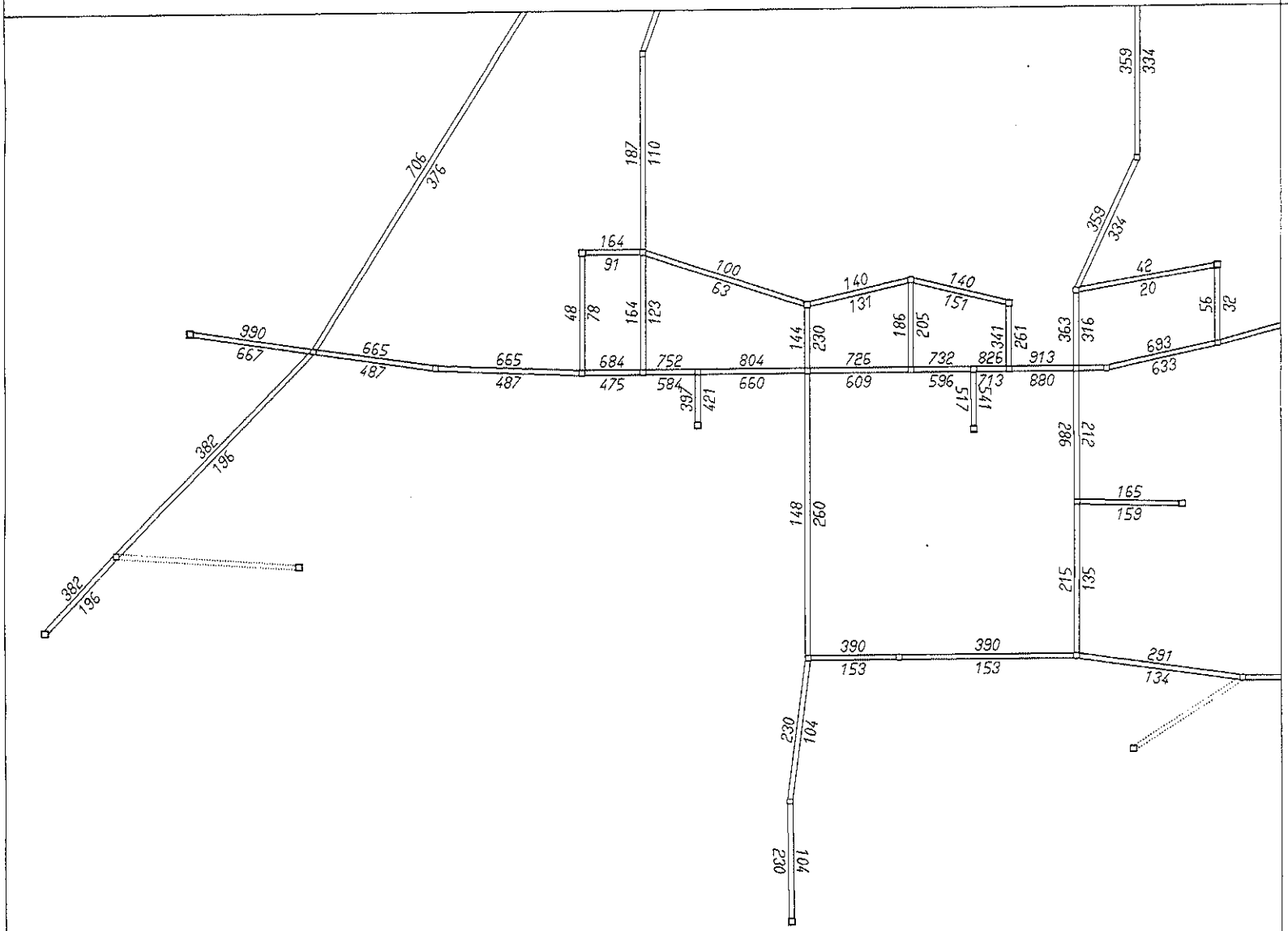

WINDOW B:
-222.2/372.876
-13.73/ 529.26

EMME/2 PROJECT: Corvallis-Philomath Study Area (62,500 population)
SCENARIO 20: 2015- West Hills Rd. Extension

98-05-05 16:41
MODULE: 6.12
DAE.....bjd

AUTO VOLUMES

emme/2

LINKS:
all

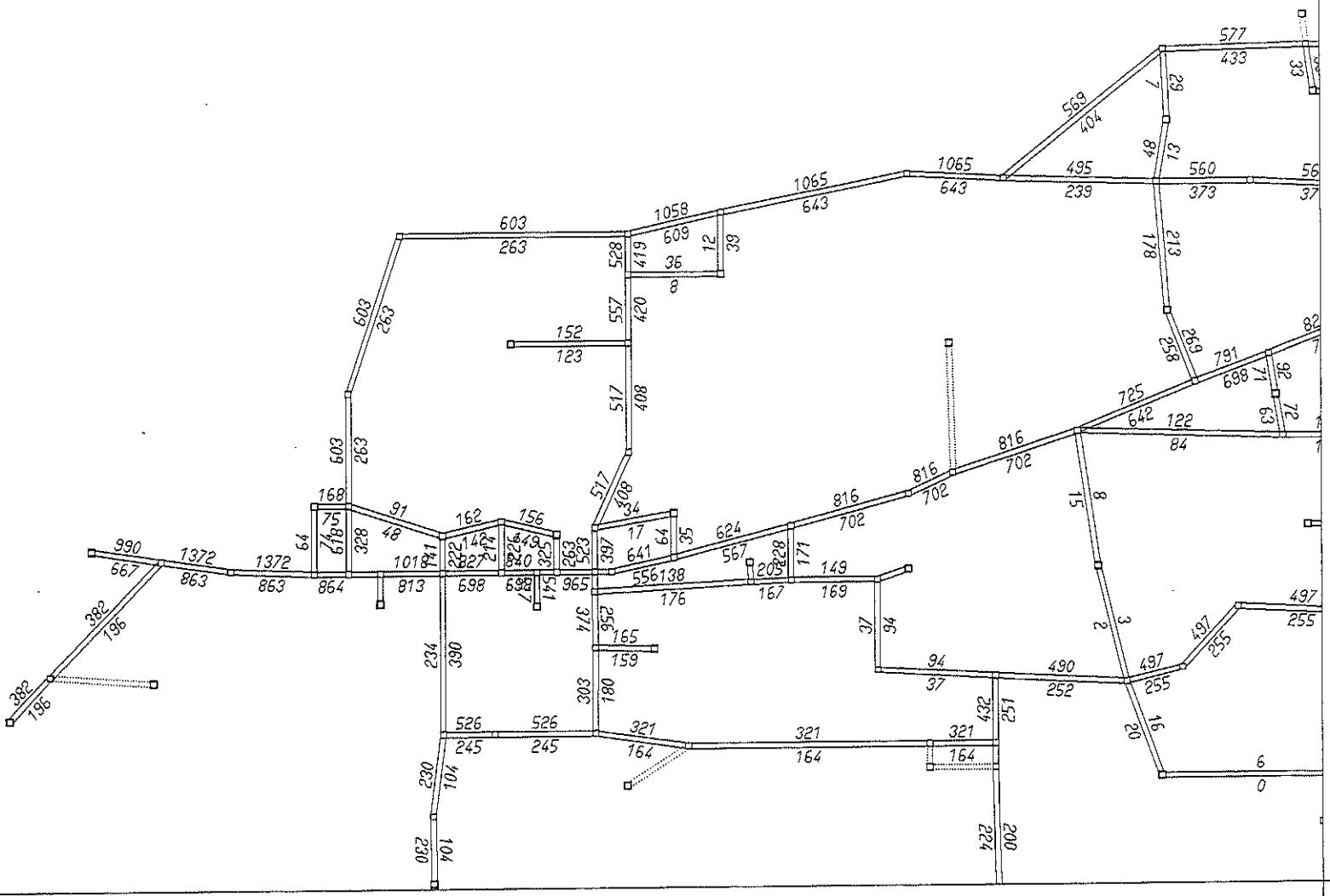

WINDOW A:
-224/375.402
162.96/665.598

EMME/2 PROJECT: Corvallis-Philomath Study Area (62.500 population)
SCENARIO 30: 2015- Applegate Connection Over Newton Creek

98-05-05 17:07
MODULE: 6.12
DAE.....bjd

AUTO VOLUMES

emme/2

LINKS:
all

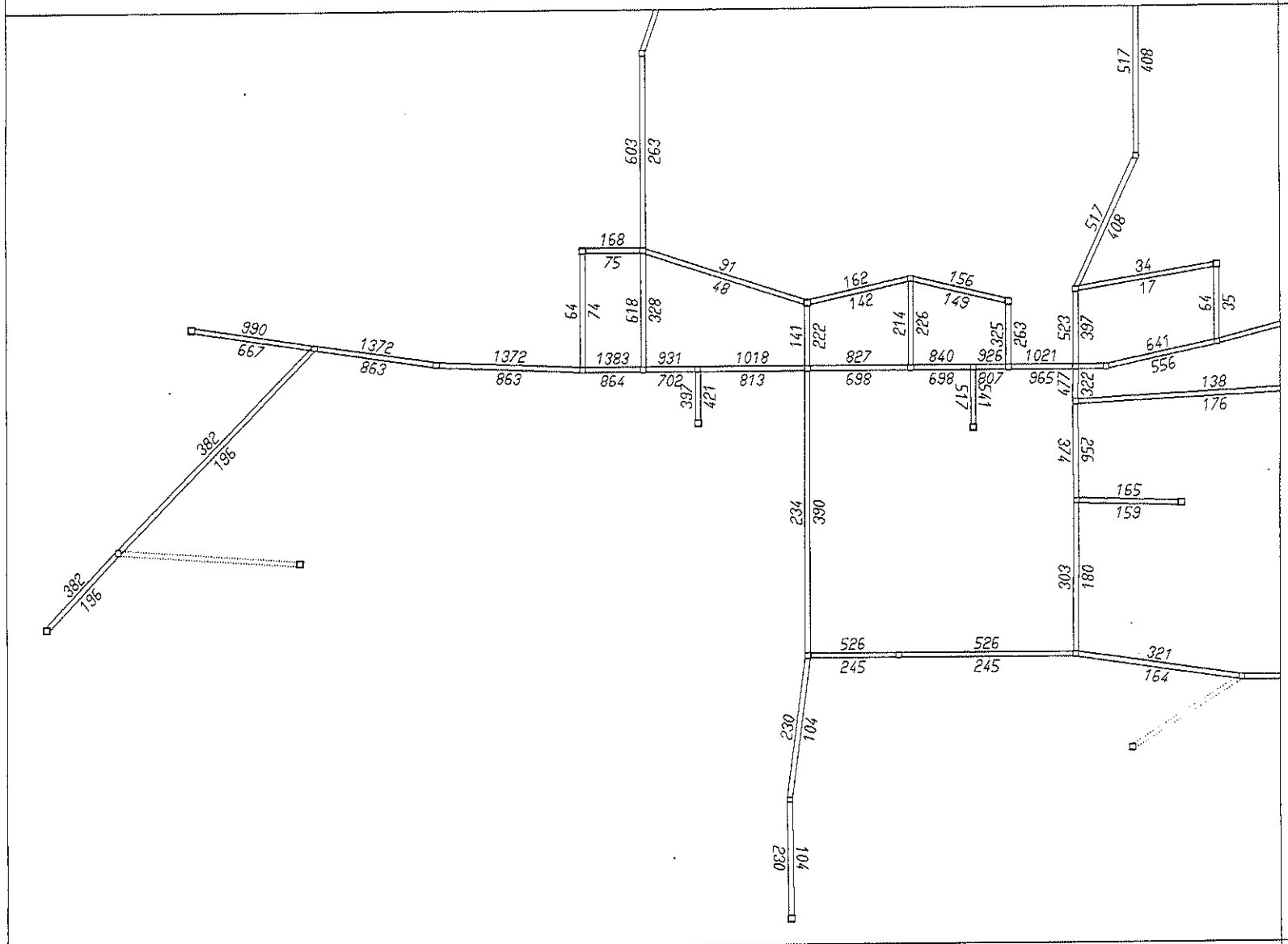

WINDOW 8:
-222.2/372.876
-13.73/ 529.26

EMME/2 PROJECT: Corvallis-Philomath Study Area (62.500 population)
SCENARIO 30: 2015- Applegate Connection Over Newton Creek

98-05-05 17:07
MODULE: 6.12
DAE.....bjd

AUTO VOLUMES

emme/2

LINKS:
all

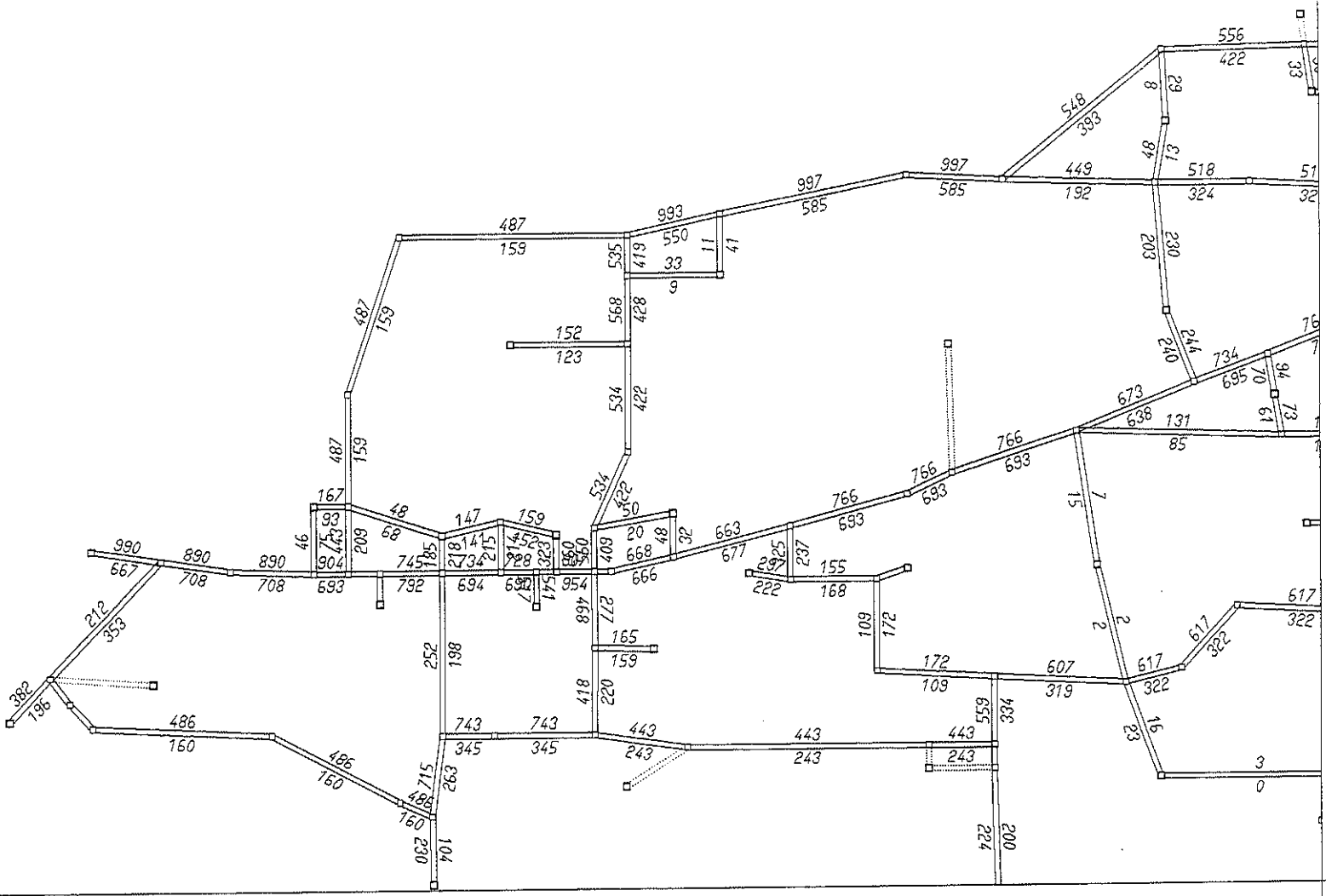

WINDOW A:
-224/375.402
162.96/665.598

EMME/2 PROJECT: Corvallis-Philomath Study Area (62.500 population)
SCENARIO 10: 2015- Grange Hall Rd. Improvements

98-05-05 16:09
MODULE: 6.12
DAE.....bjd

AUTO VOLUMES

emme/2

LINKS:
all

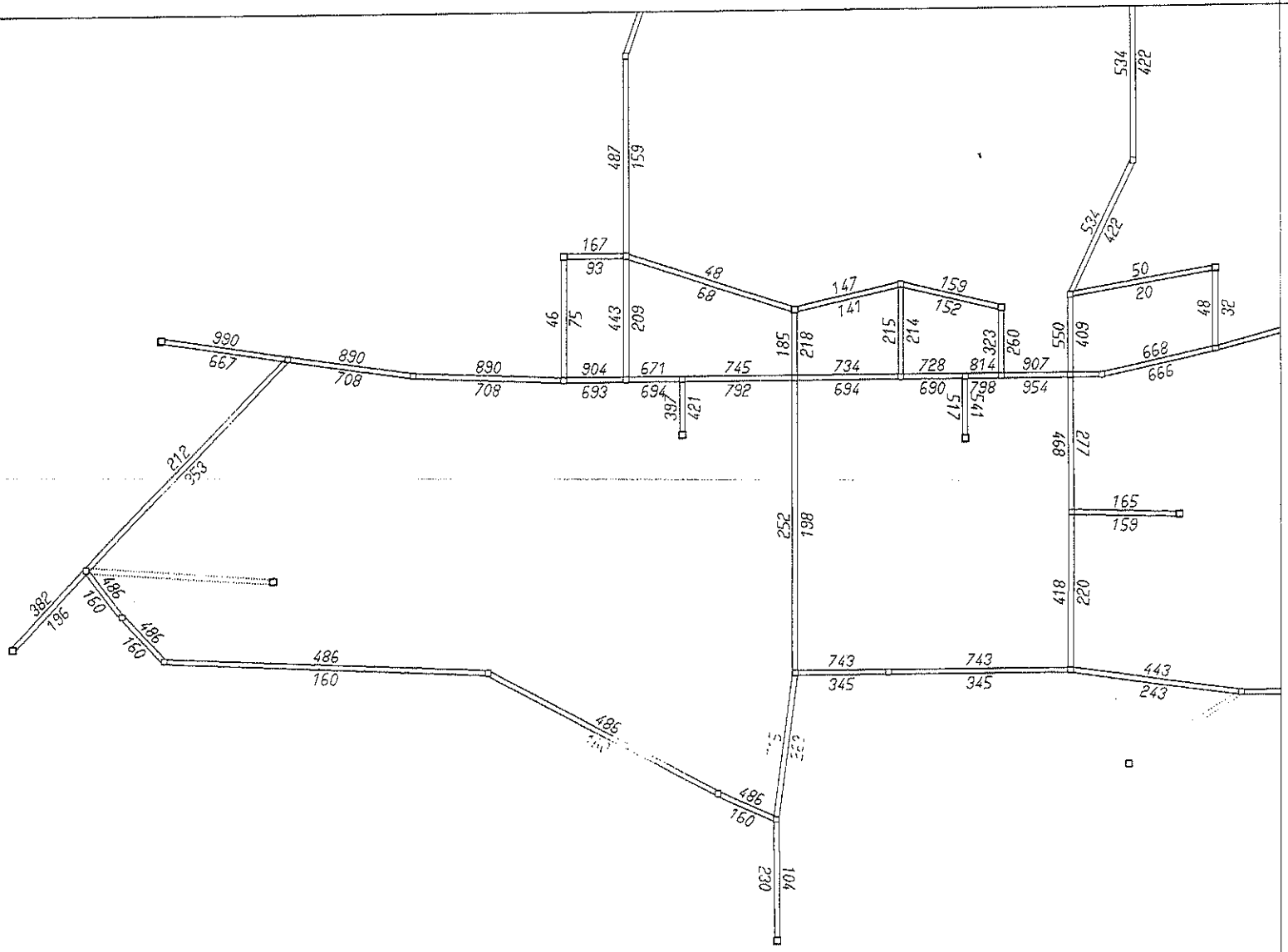

WINDOW B:
-222.2/372.876
-13.73/ 529.26

EMME/2 PROJECT: Corvallis-Philomath Study Area (62.500 population)
SCENARIO 10: 2015- Grange Hall Rd. Improvements

98-05-05 16:10
MODULE: 6.12
DAE.....bjd

AUTO VOLUMES

emme/2

LINKS:
all

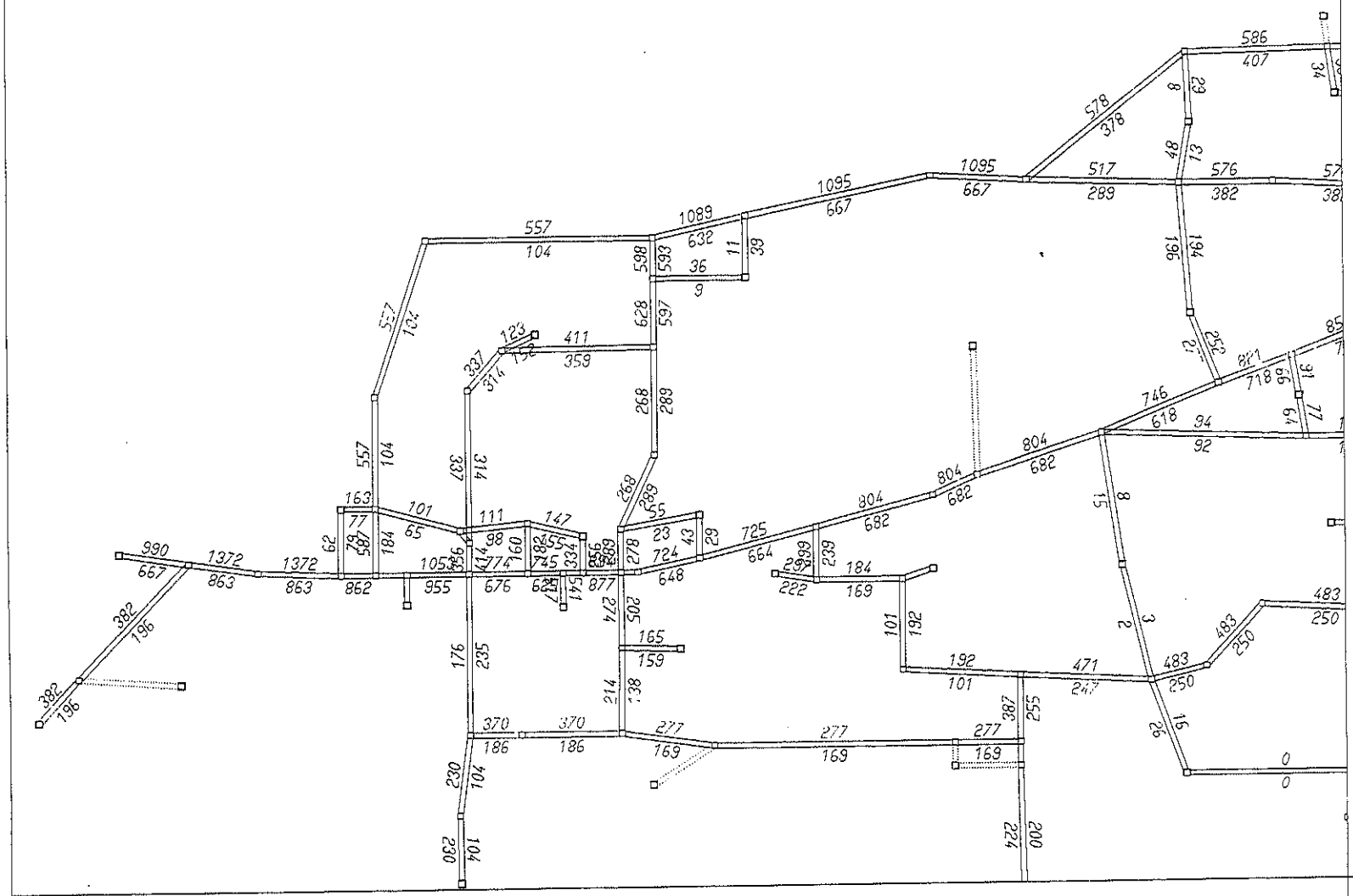

WINDOW A:
-224/375.402
162.96/665.598

EMME/2 PROJECT: Corvallis-Philomath Study Area (62.500 population)
SCENARIO 70: 2015- Industrial Way/13th St. Extension

98-05-06 09:46
MODULE: 6.12
DAE.....bid

AUTO VOLUMES

emme/2

LINKS:
all

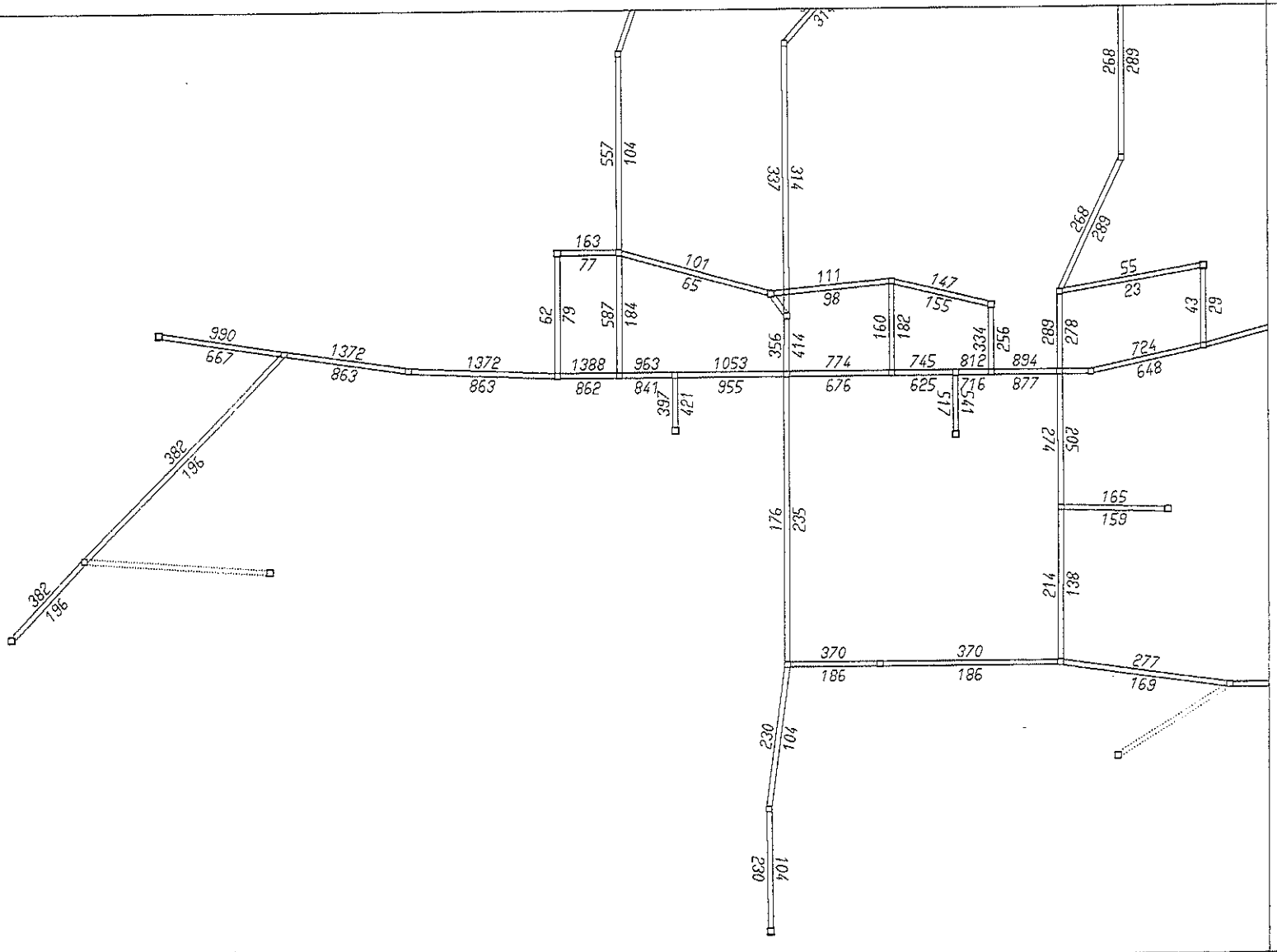

WINDOW B:
-222.2/372.876
-13.73/ 529.26

EMME/2 PROJECT: Corvallis-Philomath Study Area (62.500 population)
SCENARIO 70: 2015- Industrial Way/13th St. Extension

98-05-06 09:47
MODULE: 6.12
DAE.....bjd

AUTO VOLUMES

emme/2

LINKS:
all

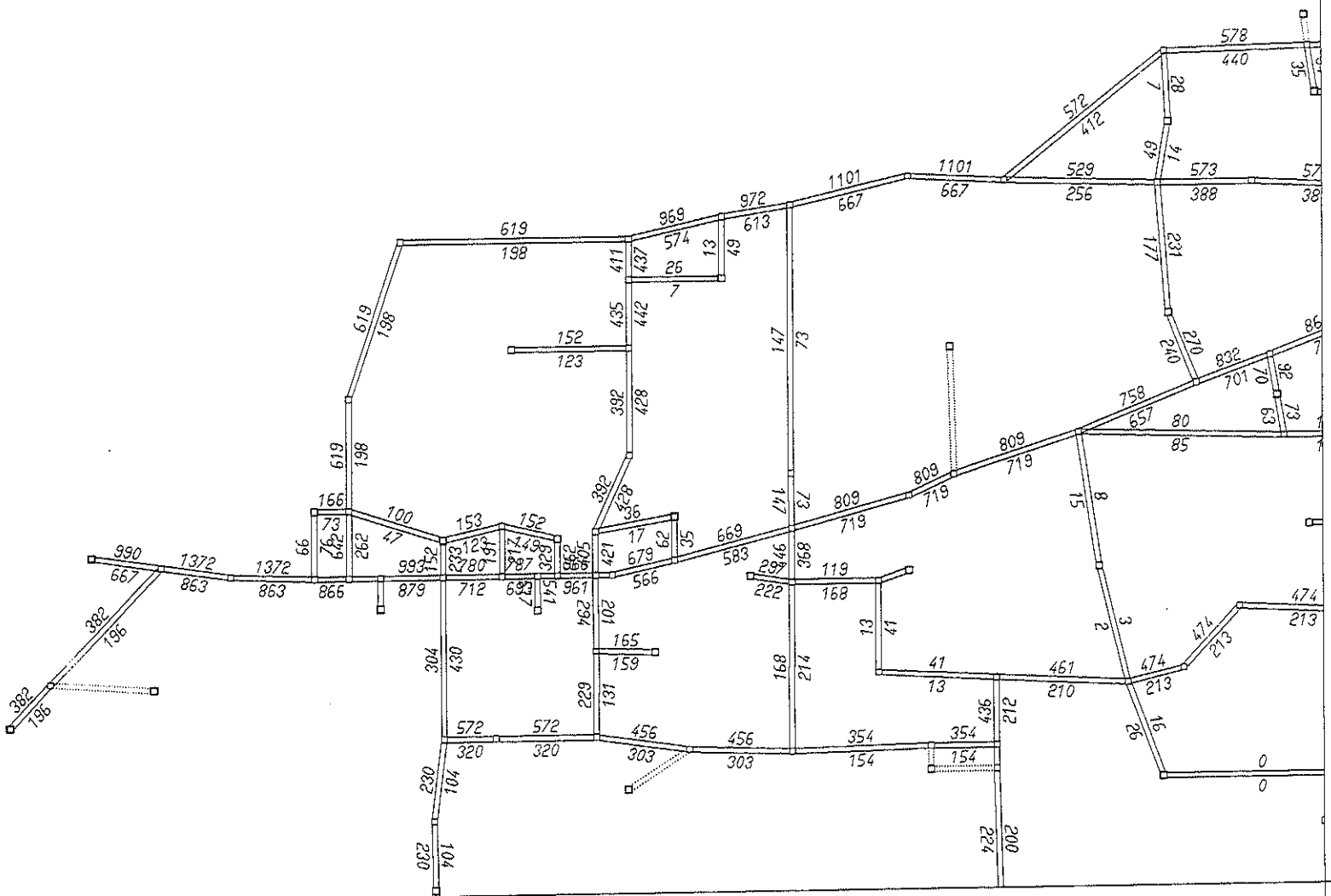

WINDOW A:
-224/375.402
162.96/665.598

EMME/2 PROJECT: Corvallis-Philomath Study Area (62.500 population)
SCENARIO 80: 2015- 26th St. Extension

98-05-06 10:05
MODULE: 6.12
DAE.....bjd

AUTO VOLUMES

emme/2

LINKS:
all

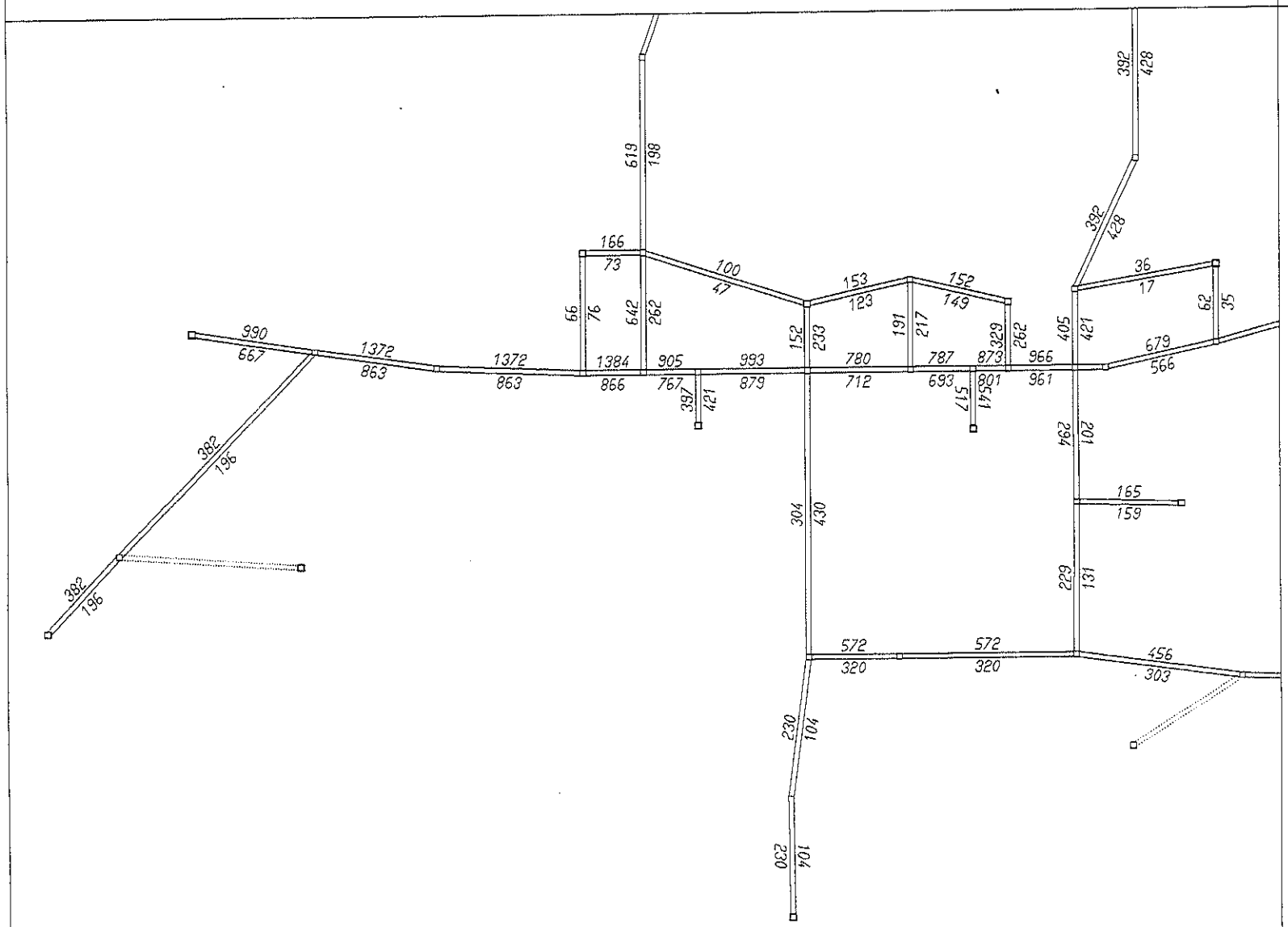

WINDOW B:
-222.2/372.876
-13.73/ 529.26

EMME/2 PROJECT: Corvallis-Philomath Study Area (62.500 population)
SCENARIO 80: 2015- 26th St. Extension

98-05-06 10:05
MODULE: 6.12
DAE.....bjd

AUTO VOLUMES

emme/2

LINKS:
all

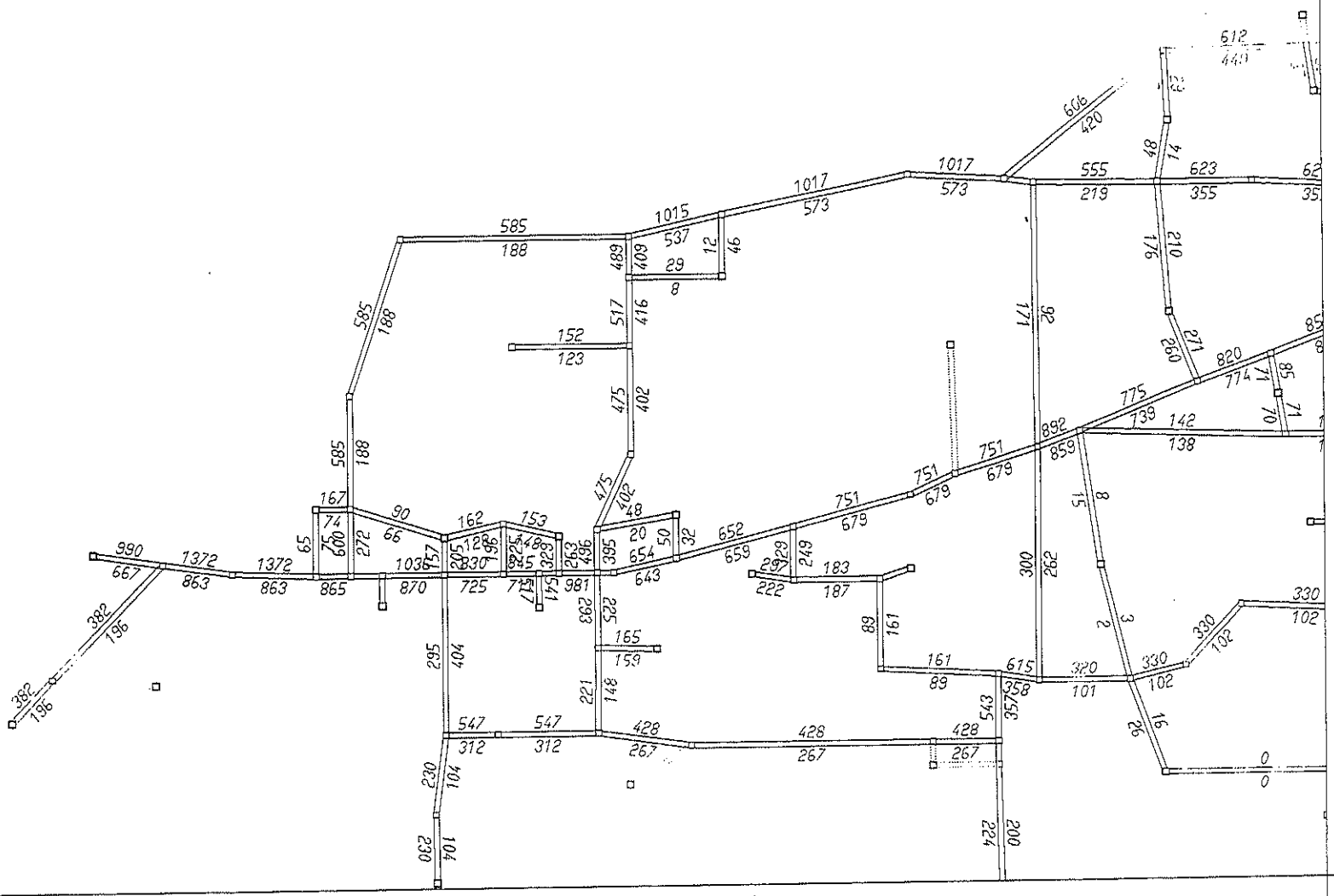

WINDOW A:
-224/375.402
162.96/665.598

EMME/2 PROJECT: Corvallis-Philomath Study Area (62.500 population)
SCENARIO 90: 2015- 71st St. Extension

98-05-06 10:22
MODULE: 6.12
DAE.....bjd

AUTO VOLUMES

emme/2

LINKS:
all

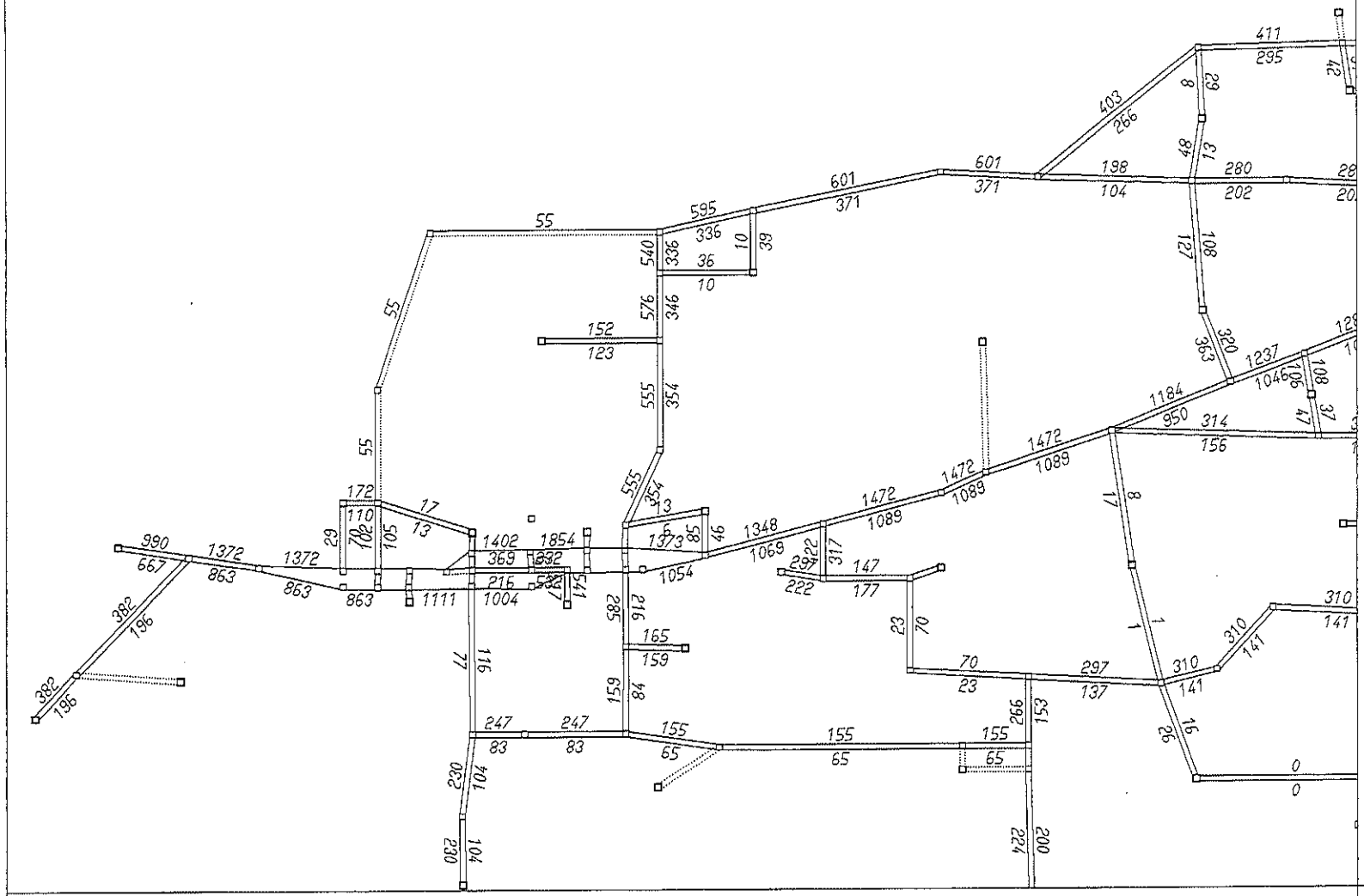

WINDOW A:
-224/375.402
162.96/665.598

EMME/2 PROJECT: Corvallis-Philomath Study Area (62.500 population)
SCENARIO 100: 2015- Hwy 20/34 Widened to 4 Lanes To 53rd St.

98-06-26 10:57
MODULE: 6.12
DAE.....bjd

AUTO VOLUMES

emme/2

LINKS:
all

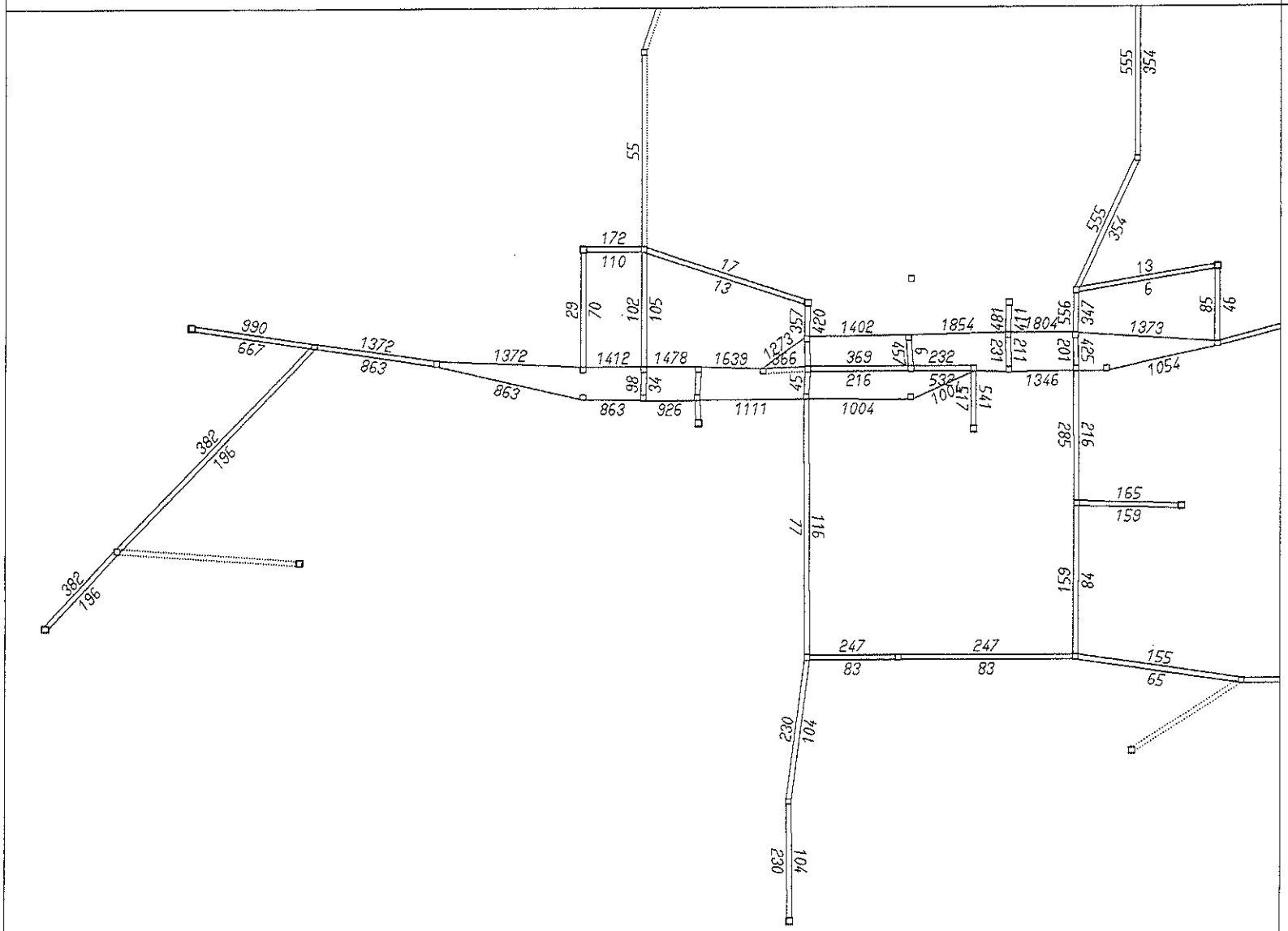

WINDOW B:
-222.2/372.876
-13.73/ 529.26

EMME/2 PROJECT: Corvallis-Philomath Study Area (62,500 population)
SCENARIO 100: 2015- Hwy 20/34 Widened to 4 Lanes To 53rd St.

98-06-26 10:57
MODULE: 6.12
DAE.....bjd

APPENDIX E
DESCRIPTION OF LEVEL OF SERVICE METHODOLOGY

LEVEL OF SERVICE CONCEPT

Transportation engineers have established various standards for measuring the capacity and performance of an intersection or roadway. Each standard is associated with a particular level-of-service (LOS). The LOS concept requires consideration of factors that include travel speed, delay, frequency of interruption in traffic flow, relative freedom for traffic maneuvers, and driver comfort and convenience. Six standards have been established ranging from LOS A, where traffic is relatively free-flowing, to LOS F, where the intersection or street is totally saturated with traffic and movement is very difficult.

Various intersections within the Philomath study area were selected and analyzed for their operational character based on the traffic volumes found to occur during the PM peak hour for existing and future conditions. Signalized intersections were evaluated based on the overall average delay to all vehicles entering the intersection and the volume-to-capacity ratio. The unsignalized intersections were evaluated based on the availability of adequate gaps in the main street flow of traffic to safely accommodate the most critical movement from the side street approach.

Signalized Intersections

Regarding signalized intersections, the concept of level-of-service is a quantitative measure of the ratio between the existing or projected volumes and the capacity of the roadway at a given location. This ratio is known as Volume to Capacity (v/c). The v/c ratios are broken down further into the six LOS descriptions ranging for A to F, for operations identification purposes. The six LOS grades are described qualitatively for signalized intersections in Table E-1. Additionally, Table E-2 identifies the relationship between level of service and the v/c ratio. Under these criteria, a LOS D is generally considered to represent the minimum acceptable design standard.

Unsignalized Intersections

The operational characteristics of selected unsignalized intersections throughout the study area were assessed using ODOT's UNSIG-10 program. This program calculates delay and level-of-service for the critical movements of an intersection, based on the reserve capacity. Unsignalized intersections include Two-Way Stop-Controlled (TWSC) and All-Way Stop Controlled (AWSC) intersections. A qualitative description of the various service levels associated with an unsignalized intersection is presented in Table E-3. Using the criteria in this table, LOS D is generally considered to represent the minimum acceptable design standard.

It should be noted that the LOS criteria for unsignalized intersections are somewhat different than the criteria used for signalized intersections. The primary reason for this difference is that drivers expect different levels of performance from different kinds of transportation facilities. The expectation is that a signalized intersection is designed to carry higher traffic volumes than an unsignalized intersection. Additionally, there are a number of driver behavior considerations that combine to make delays at signalized intersections less onerous than at unsignalized intersections.

For example, drivers at signalized intersections are able to relax during the red interval, while drivers on the minor street approaches to TWSC intersections must remain attentive to the task if identifying acceptable gaps and vehicle conflicts. Also, there is often much more variability in the amount of delay experienced by individual drivers at unsignalized intersections than signalized intersections. For these reasons, it is considered that the total delay threshold for any given LOS is less for an unsignalized intersections than for a signalized intersection. While overall intersection LOS is calculated for AWSC intersections, LOS is only calculated for the minor approaches and the major street left turn movements at TWSC intersections. No delay is assumed for the major

street through movements. For TWSC intersections, the overall intersection LOS is defined by the movement having the worst LOS (typically a minor street left turn).

TABLE E-1
LEVEL-OF-SERVICE DESCRIPTIONS FOR SIGALIZED INSERSECTIONS

Level of Service	Traffic Flow	Comments	Maneuverability
A Desirable	Free	Traffic flows freely with no delays.	Drivers can maneuver easily and find freedom in operation
B Desirable	Stable	Traffic still flows smoothly with few delays.	Some drivers feel somewhat restricted within groups of vehicles.
C Desirable	Stable	Traffic generally flows smoothly but occasionally vehicles may be delayed through one signal cycle. Desired urban area design level.	Backups may develop behind turning vehicles. Most drivers feel somewhat restricted.
D Acceptable	Approaching Unstable	Traffic delays may be more than one signal cycle during peak hours but excessive back-ups do not occur. Considered acceptable urban area design level.	Maneuverability is limited during short peak periods due to temporary backups.
E Unsatisfactory	Unstable	Delays may be great and up to several signal cycles. Short periods of this level may be tolerated during peak hours in lieu of the cost and disruption of providing a higher level of service.	There are typically long queues of vehicles waiting upstream of the intersections.
F Unsatisfactory	Forced	Excessive delay causes reduced capacity. Always considered unsatisfactory. May be tolerated in recreational areas where occurrence is rare.	Traffic is backed up from other locations and may restrict or prevent movement of vehicles at the intersection.

Source: ODOT, Transportation Development Branch, SIGCAP2 Users Manual, Page B-3.

TABLE E-2
LEVEL-OF-SERVICE CRITERIA
FOR A SIGNALIZED INTERSECTION

Level of Service	V/C Ratio
A	0.00-0.48
B	0.49-0.59
C	0.60-0.69
C-D	0.70-0.73
D	0.74-0.83
D-E	0.84-0.87
E	0.88-0.97
E-F	0.98-0.99
F	>1.00

Source: ODOT, Transportation Development Branch, SIGCAP2 Users Manual, page B-2

TABLE E-3
LEVEL-OF-SERVICE DESCRIPTIONS
FOR AN UNSIGNALIZED INTERSECTION

Level of Service	Delay Range (seconds/vehicle)
A	• Nearly all drivers find freedom of operation. • Very seldom is there more than one vehicle in the queue.
B	• Some drivers begin to consider the delay an inconvenience. • Occasionally there is more than one vehicle in the queue.
C	• Most drivers feel restricted, but not objectionably so. • Many times there is more than one vehicle in the queue.
D	• Drivers feel quite restricted. • Often there is more than one vehicle in the queue.
E	• Represents a condition in which the demand is near or equal to the probable maximum number of vehicles that can be accommodated by the movement. • Drivers find the delays to be approaching intolerable levels. • There is almost always more than one vehicle in the queue.
F	• Forced flow. • Represents an intersection failure condition that is caused by geometric and/or operational constraints external to the intersection.

SIGNAL WARRANT ANALYSIS

TRAFFIC SIGNAL WARRANTS

INTERSECTION INFORMATION

City:	Philomath		Scenario:	1998 Existing	
Population:	3000				
Intersection Location:					
(Rural/Urban)	Urban				
Major Street Name:	Main St.		Minor Street Name:	9th St.	
Number of Moving			Number of Moving		
Lanes for Each Approach:	1		Lanes for Each Approach:	1	
Speed:	35 mph		Speed:	25 mph	
Street Width:	48 ft		Street Width:	40 ft	
Direction:	EB*	WB*	Direction:	NB**	SB**
Hour Beginning:			Hour Beginning:		
12:00 AM			12:00 AM		
1:00 AM			1:00 AM		
2:00 AM			2:00 AM		
3:00 AM			3:00 AM		
4:00 AM			4:00 AM		
5:00 AM			5:00 AM		
6:00 AM	292	159	6:00 AM	0	35
7:00 AM	646	230	7:00 AM	0	94
8:00 AM	527	280	8:00 AM	0	66
9:00 AM	363	277	9:00 AM	0	25
10:00 AM	349	307	10:00 AM	0	28
11:00 AM	339	312	11:00 AM	0	31
12:00 PM	318	345	12:00 PM	0	23
1:00 PM	313	329	1:00 PM	0	32
2:00 PM	400	356	2:00 PM	0	18
3:00 PM	348	439	3:00 PM	0	28
4:00 PM	435	534	4:00 PM	0	39
5:00 PM	361	569	5:00 PM	0	42
6:00 PM			6:00 PM		
7:00 PM			7:00 PM		
8:00 PM			8:00 PM		
9:00 PM			9:00 PM		
10:00 PM			10:00 PM		
11:00 PM			11:00 PM		
24-hour Total	4691	4137	24-hour Total	0	461

*- EB and WB traffic volumes were estimated using the 12-hour turning movement count performed at the intersection of Highway 20 and Highway 34 to the west.

**- NB and SB traffic volumes were taken from a road tube count performed in September 1997.

TRAFFIC SIGNAL WARRANTS

WARRANT 1, MINIMUM VEHICULAR VOLUME (8 HOURS)

4:00 PM	435	534	4:00 PM	0	39	N
5:00 PM	361	569	5:00 PM	0	42	N
7:00 AM	646	230	7:00 AM	0	94	N
8:00 AM	527	280	8:00 AM	0	66	N
3:00 PM	348	439	3:00 PM	0	28	N
2:00 PM	400	356	2:00 PM	0	18	N
12:00 PM	318	345	12:00 PM	0	23	N
10:00 AM	349	307	10:00 AM	0	28	N
11:00 AM	339	312	11:00 AM	0	31	N
1:00 PM	313	329	1:00 PM	0	32	N
9:00 AM	363	277	9:00 AM	0	25	N
6:00 AM	292	159	6:00 AM	0	35	N

Warrant Requirements:

Major Street Lanes:	1
Minor Street Lanes:	1
Minimum Volume on Combined Major Street Approaches:	350
Higher Minor Street Approach:	105

Note: The intersection is located in an urban area of a community with a population of less than 10,000, therefore these minimum volumes are 70 percent of the regular requirements

IS THE SIGNAL WARRANT MET? **NO**

WARRANT 2, INTERRUPTION OF CONTINUOUS TRAFFIC (8 HOURS)

4:00 PM	435	534	4:00 PM	0	39	N
5:00 PM	361	569	5:00 PM	0	42	N
7:00 AM	646	230	7:00 AM	0	94	Y
8:00 AM	527	280	8:00 AM	0	66	Y
3:00 PM	348	439	3:00 PM	0	28	N
2:00 PM	400	356	2:00 PM	0	18	N
12:00 PM	318	345	12:00 PM	0	23	N
10:00 AM	349	307	10:00 AM	0	28	N
11:00 AM	339	312	11:00 AM	0	31	N
1:00 PM	313	329	1:00 PM	0	32	N
9:00 AM	363	277	9:00 AM	0	25	N
6:00 AM	292	159	6:00 AM	0	35	N

Warrant Requirements:

Major Street Lanes:	1
Minor Street Lanes:	1
Minimum Volume on Combined Major Street Approaches:	525
Higher Minor Street Approach:	53

Note: The intersection is located in an urban area of a community with a population of less than 10,000, therefore these minimum volumes are 70 percent of the regular requirements

IS THE SIGNAL WARRANT MET? **NO**

TRAFFIC SIGNAL WARRANTS

WARRANT 3, MINIMUM PEDESTRIAN VOLUME (4 HOURS)

4:00 PM	435	534	38	4:00 PM	0	39
5:00 PM	361	569	42	5:00 PM	0	42
7:00 AM	646	230	47	7:00 AM	0	94
8:00 AM	527	280	55	8:00 AM	0	66

Warrant Requirements:

Major Street Lanes:	1
Major Street Speed:	35 mph
Major Street Critical Gap:	12.0 s
Minor Street Lanes:	1

IS THE SIGNAL WARRANT MET? **YES, PARTIALLY**

Note: This warrant calculation examines only one part of the pedestrian warrant. In addition to checking the number of gaps available for pedestrians to cross the street, minimum pedestrian volumes are also necessary. A traffic signal may be warranted where the pedestrian volume crossing the major street at an intersection or mid-block location during an average day is 100 or more for each of any four hours or 190 or more during any one hour.

WARRANT 4, SCHOOL CROSSING

This warrant is not analyzed as part of the signal warrant caluculations.

WARRANT 5, PROGRESSIVE MOVEMENT

This warrant is not analyzed as part of the signal warrant caluculations.

WARRANT 6, ACCIDENT EXPERIENCE

This warrant is not analyzed as part of the signal warrant caluculations.

WARRANT 7, SYSTEMS WARRANT

This warrant is not analyzed as part of the signal warrant caluculations.

WARRANT 8, COMBINATION OF WARRANTS

This warrant is not analyzed as part of the signal warrant caluculations.

TRAFFIC SIGNAL WARRANTS

WARRANT 9, FOUR HOUR VOLUMES

4:00 PM	435	534	60	4:00 PM	0	39	N
5:00 PM	361	569	60	5:00 PM	0	42	N
7:00 AM	646	230	60	7:00 AM	0	94	Y
8:00 AM	527	280	60	8:00 AM	0	66	Y
3:00 PM	348	439	60	3:00 PM	0	28	N
2:00 PM	400	356	60	2:00 PM	0	18	N
12:00 PM	318	345	70	12:00 PM	0	23	N
10:00 AM	349	307	70	10:00 AM	0	28	N

Warrant Requirements:
Major Street Lanes: 1
Minor Street Lanes: 1

Note: The intersection is located in an urban area of a community with a population of less than 10,000, therefore Figure 4-8 from the MUTCD was used for the warrant analysis instead of Figure 4-7.

IS THE SIGNAL WARRANT MET? **NO**

WARRANT 10, PEAK HOUR DELAY

This warrant is not analyzed as part of the signal warrant caluculations.

WARRANT 11, PEAK HOUR VOLUME

4:00 PM	435	534	80	4:00 PM	0	39	N
5:00 PM	361	569	90	5:00 PM	0	42	N
7:00 AM	646	230	90	7:00 AM	0	94	Y
8:00 AM	527	280	110	8:00 AM	0	66	N

Warrant Requirements:
Major Street Lanes: 1
Minor Street Lanes: 1

Note: The intersection is located in an urban area of a community with a population of less than 10,000, therefore figure 4-6 from the MUTCD was used for the warrant analysis instead of figure 4-5.

IS THE SIGNAL WARRANT MET? **YES**

TRAFFIC SIGNAL WARRANTS

INTERSECTION INFORMATION

City:	Philomath		Scenario:	2015- No Build	
Population:	3000				
Intersection Location: (Rural/Urban)	Urban				
Major Street Name:	Main St.		Minor Street Name:	9th St.	
Number of Moving Lanes for Each Approach:	1		Number of Moving Lanes for Each Approach:	1	
Speed:	35 mph		Speed:	25 mph	
Street Width:	48 ft		Street Width:	40 ft	
Direction:	EB*	WB*	Direction:	NB**	SB**
Hour Beginning:			Hour Beginning:		
12:00 AM			12:00 AM		
1:00 AM			1:00 AM		
2:00 AM			2:00 AM		
3:00 AM			3:00 AM		
4:00 AM			4:00 AM		
5:00 AM			5:00 AM		
6:00 AM	702	246	6:00 AM	0	217
7:00 AM	1001	357	7:00 AM	0	583
8:00 AM	817	434	8:00 AM	0	409
9:00 AM	563	429	9:00 AM	0	155
10:00 AM	541	476	10:00 AM	0	174
11:00 AM	525	484	11:00 AM	0	192
12:00 PM	493	535	12:00 PM	0	143
1:00 PM	485	510	1:00 PM	0	198
2:00 PM	620	552	2:00 PM	0	112
3:00 PM	539	680	3:00 PM	0	174
4:00 PM	674	828	4:00 PM	0	612
5:00 PM	560	882	5:00 PM	0	260
6:00 PM			6:00 PM		
7:00 PM			7:00 PM		
8:00 PM			8:00 PM		
9:00 PM			9:00 PM		
10:00 PM			10:00 PM		
11:00 PM			11:00 PM		
24-hour Total	7520	6413	24-hour Total	0	3229

*- EB and WB traffic volumes were estimated using 1998 volumes increased by growth factors of 1.54 for EB traf and 1.60 for WB traffic. Growth factors were determined from EMME/2 model output.

**- SB traffic volumes were estimated using 1998 volumes increased by a growth factor of 6.24. This growth fa was also determined from EMME/2 model output.

TRAFFIC SIGNAL WARRANTS

WARRANT 1, MINIMUM VEHICULAR VOLUME (8 HOURS)

4:00 PM	674	828	4:00 PM	0	612	Y
7:00 AM	1001	357	7:00 AM	0	583	Y
5:00 PM	560	882	5:00 PM	0	260	Y
12:00 AM	0	0	12:00 AM	0	0	N
8:00 AM	817	434	8:00 AM	0	409	Y
3:00 PM	539	680	3:00 PM	0	174	Y
2:00 PM	620	552	2:00 PM	0	112	Y
11:00 AM	525	484	11:00 AM	0	192	Y
1:00 PM	485	510	1:00 PM	0	198	Y
11:00 AM	525	484	11:00 AM	0	192	Y
1:00 PM	485	510	1:00 PM	0	198	Y
6:00 AM	702	246	6:00 AM	0	217	Y

Warrant Requirements:

Major Street Lanes:	1
Minor Street Lanes:	1
Minimum Volume on Combined Major Street Approaches:	350
Higher Minor Street Approach:	105

Note: The intersection is located in an urban area of a community with a population of less than 10,000, therefore these minimum volumes are 70 percent of the regular requirements

IS THE SIGNAL WARRANT MET? YES

WARRANT 2, INTERRUPTION OF CONTINUOUS TRAFFIC (8 HOURS)

4:00 PM	674	828	4:00 PM	0	612	Y
7:00 AM	1001	357	7:00 AM	0	583	Y
5:00 PM	560	882	5:00 PM	0	260	Y
12:00 AM	0	0	12:00 AM	0	0	N
8:00 AM	817	434	8:00 AM	0	409	Y
3:00 PM	539	680	3:00 PM	0	174	Y
2:00 PM	620	552	2:00 PM	0	112	Y
11:00 AM	525	484	11:00 AM	0	192	Y
1:00 PM	485	510	1:00 PM	0	198	Y
11:00 AM	525	484	11:00 AM	0	192	Y
1:00 PM	485	510	1:00 PM	0	198	Y
6:00 AM	702	246	6:00 AM	0	217	Y

Warrant Requirements:

Major Street Lanes:	1
Minor Street Lanes:	1
Minimum Volume on Combined Major Street Approaches:	525
Higher Minor Street Approach:	53

Note: The intersection is located in an urban area of a community with a population of less than 10,000, therefore these minimum volumes are 70 percent of the regular requirements

IS THE SIGNAL WARRANT MET? YES

TRAFFIC SIGNAL WARRANTS

WARRANT 3, MINIMUM PEDESTRIAN VOLUME (4 HOURS)

4:00 PM	674	828	10	4:00 PM	0	612
7:00 AM	1001	357	15	7:00 AM	0	583
5:00 PM	560	882	12	5:00 PM	0	260
12:00 AM	0	0	0	12:00 AM	0	0

Warrant Requirements:

Major Street Lanes:	1
Major Street Speed:	35 mph
Major Street Critical Gap:	12.0 s
Minor Street Lanes:	1

IS THE SIGNAL WARRANT MET? **YES, PARTIALLY**

Note: This warrant calculation examines only one part of the pedestrian warrant. In addition to checking the number of gaps available for pedestrians to cross the street, minimum pedestrian volumes are also necessary. A traffic signal may be warranted where the pedestrian volume crossing the major street at an intersection or mid-block location during an average day is 100 or more for each of any four hours or 190 or more during any one hour.

WARRANT 4, SCHOOL CROSSING

This warrant is not analyzed as part of the signal warrant caluculations.

WARRANT 5, PROGRESSIVE MOVEMENT

This warrant is not analyzed as part of the signal warrant caluculations.

WARRANT 6, ACCIDENT EXPERIENCE

This warrant is not analyzed as part of the signal warrant caluculations.

WARRANT 7, SYSTEMS WARRANT

This warrant is not analyzed as part of the signal warrant caluculations.

WARRANT 8, COMBINATION OF WARRANTS

This warrant is not analyzed as part of the signal warrant caluculations.

TRAFFIC SIGNAL WARRANTS

WARRANT 9, FOUR HOUR VOLUMES

4:00 PM	674	828	60	4:00 PM	0	612	Y
7:00 AM	1001	357	60	7:00 AM	0	583	Y
5:00 PM	560	882	60	5:00 PM	0	260	Y
12:00 AM	0	0	#N/A	12:00 AM	0	0	#N/A
8:00 AM	817	434	60	8:00 AM	0	409	Y
3:00 PM	539	680	60	3:00 PM	0	174	Y
2:00 PM	620	552	60	2:00 PM	0	112	Y
11:00 AM	525	484	60	11:00 AM	0	192	Y

Warrant Requirements:
Major Street Lanes: 1
Minor Street Lanes: 1

Note: The intersection is located in an urban area of a community with a population of less than 10,000, therefore Figure 4-8 from the MUTCD was used for the warrant analysis instead of Figure 4-7.

IS THE SIGNAL WARRANT MET? **YES**

WARRANT 10, PEAK HOUR DELAY

This warrant is not analyzed as part of the signal warrant caluculations.

WARRANT 11, PEAK HOUR VOLUME

4:00 PM	674	828	75	4:00 PM	0	612	Y
7:00 AM	1001	357	75	7:00 AM	0	583	Y
5:00 PM	560	882	75	5:00 PM	0	260	Y
12:00 AM	0	0	#N/A	12:00 AM	0	0	#N/A

Warrant Requirements:
Major Street Lanes: 1
Minor Street Lanes: 1

Note: The intersection is located in an urban area of a community with a population of less than 10,000, therefore figure 4-6 from the MUTCD was used for the warrant analysis instead of figure 4-5.

IS THE SIGNAL WARRANT MET? **YES**

DETAILS OF OPERATIONS ANALYSIS AT INTERSECTIONS

INTERSECTION 1
SCENARIO 1
JUNE 3, 1998

INTERSECTION = 1 SCENARIO = 1 DATE/TIME: 6/3/98 11:26:52 AM

PROJECT: Philomath TSP ANALYST: BJD

File: S:\TRANS\PROJECT\ODOT0254\WORKFILE\OPERATIO\SIGOPER.SIG

CITY: Philomath POPULATION: Greater than 20,000

DESCRIPTION: 1998 Existing Conditions

INTERSECTION LOS = B

SATURATION = 59%

C= 90 G=81 Y= 9

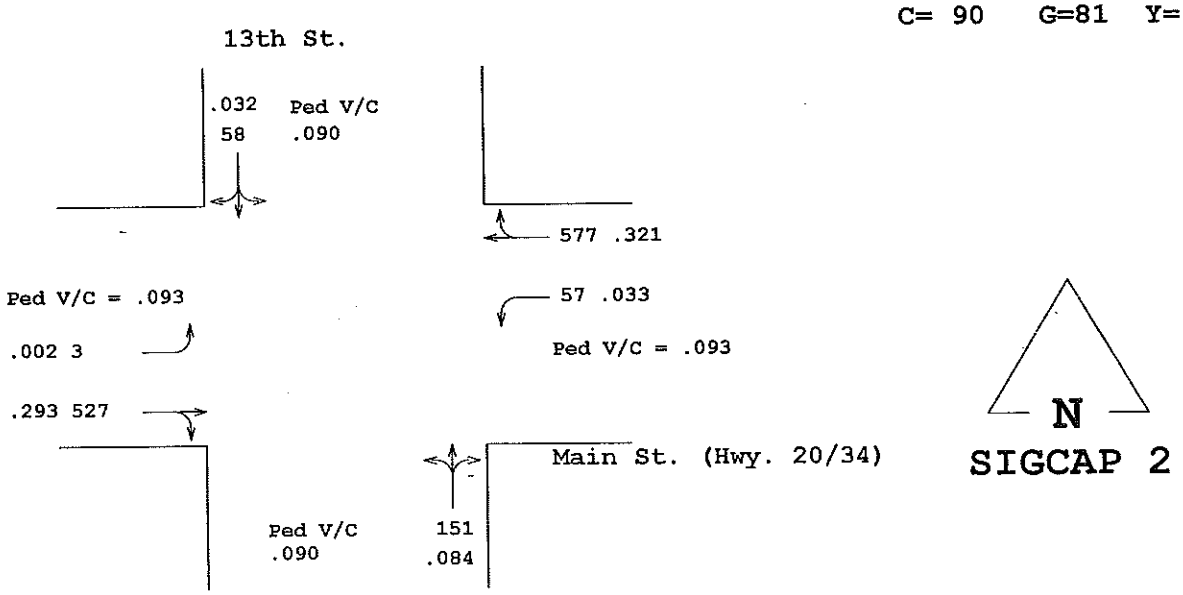

N-S V/C = .099
E-W V/C = .387
TOTAL AMBER = .100
MINIMUM V/C = .067

XXX = Adjusted Volumes .XXX = V/C

APPR	MOVMENT VOLUMES L	T	R	TOT	MOVE SATURATION L	T	R	MOVEMENT LOS L	T	R
SOUTH	83	11	57	151	59%	59%	51%	B	B	B
NORTH	27	18	13	58	59%	59%	26%	B	B	A
WEST	3	466	13	482	11%	54%	54%	A	B	B
EAST	57	571	6	634	34%	59%	59%	A	B	B

APPR	TRUCKS %	PED DIST	LANE WIDTH	PHASING
SOUTH	2.0%	50ft	12.ft	N-S -LEFT TURNS NOT PROTECTED
NORTH	2.0%	50ft	12.ft	
WEST	15.0%	48ft	12.ft	E-W -LEFT TURNS PROTECTED WITH OVERLAP
EAST	5.0%	48ft	12.ft	

LEG	LEG VOL AT LOS C
SOUTH	305
NORTH	99
WEST	1464
EAST	1509

APPR	TIME AVAIL(sec) L	T	R	RED TIME(sec) L	T	R	MOVE STORAGE(ft) L	T	R
SOUTH	16.5	16.5	16.5	70.5	70.5	70.5	154	154	154
NORTH	16.5	16.5	16.5	70.5	70.5	70.5	59	59	59
WEST	11.1	53.4	53.4	75.9	33.6	33.6	4	268	268
EAST	11.1	53.4	53.4	75.9	33.6	33.6	62	294	294

INTERSECTION = 2 SCENARIO = 1 DATE/TIME: 6/3/98 11:26:10 AM

PROJECT: Philomath TSP ANALYST: BJD

File: S:\TRANS\PROJECT\ODOT0254\WORKFILE\OPERATIO\SIGOPER.SIG

CITY: Philomath POPULATION: Fewer than 20,000

DESCRIPTION: 1998 Existing Conditions

INTERSECTION LOS = C

SATURATION = 63%

C= 90 G=81 Y= 9

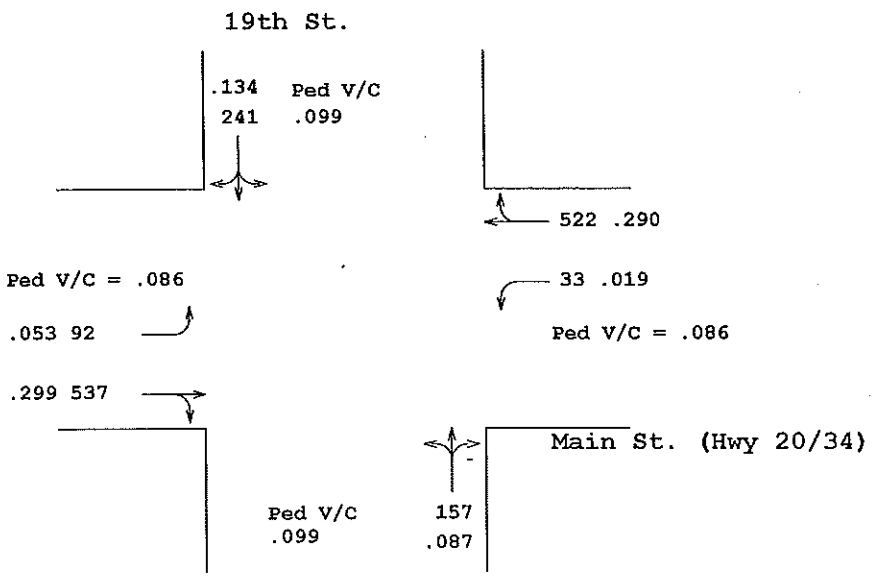

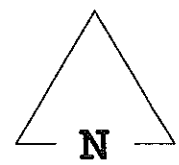

SIGCAP 2

N-S V/C = .169
E-W V/C = .365
TOTAL AMBER = .100
MINIMUM V/C = .067

XXX = Adjusted Volumes .XXX = V/C

APPR	MOVMENT VOLUMES L	T	R	TOT	MOVE SATURATION L	T	R	MOVEMENT LOS L	T	R
SOUTH	61	43	53	157	63%	63%	38%	C	C	A
NORTH	37	63	132	232	63%	63%	52%	C	C	B
WEST	84	458	35	577	52%	63%	63%	B	C	C
EAST	31	466	22	519	25%	62%	62%	A	C	C

APPR	TRUCKS %	PED DIST	LANE WIDTH	PHASING
SOUTH	5.0%	22ft	12.ft	N-S -LEFT TURNS NOT PROTECTED
NORTH	9.0%	40ft	12.ft	
WEST	14.0%	48ft	12.ft	E-W -LEFT TURNS PROTECTED WITH OVERLAP
EAST	12.0%	48ft	12.ft	

LEG	LEG VOL AT LOS C
SOUTH	332
NORTH	442
WEST	1434
EAST	1238

APPR	TIME AVAIL(sec) L	T	R	RED TIME(sec) L	T	R	MOVE STORAGE(ft) L	T	R
SOUTH	25.6	25.6	25.6	61.4	61.4	61.4	140	140	140
NORTH	25.6	25.6	25.6	61.4	61.4	61.4	216	216	216
WEST	10.1	45.3	45.3	76.9	41.7	41.7	102	334	334
EAST	10.1	45.3	45.3	76.9	41.7	41.7	37	324	324

UNSIGNALIZED - T - INTERSECTION CAPACITY CALCULATION FORM

5/ 4/1998 16:37:40

FILE NAME: hy2034ex

CITY: Philomath
ANALYST: BJD
INTERSECTION: Highway 20 at Highway 34
ALTERNATE: 1998 Existing
METRO SIZE: LESS THAN 20,000
COUNT: PM Peak
TYPE OF CONTROL: STOP
LOCATION PLAN:

APPROACH CODES ARE

LANE	1	2	3	4
A	4			
B	2	3		
C	1	3		

A: GRADE= .0%

B: - GRADE= .0%; GRADE= .0%

C

SPEED: 45 MPH
RESTRICTED SIGHT CODE IS 1
MINOR STREET ADJUSTMENTS -
ACCELERATION LANE? NO
CURB RADIUS OR TURN ANGLE? NO

APPROACH	A		B		C	
MOVE	AT	AR	BL	BT	CL	CR
VOLUME	267	9	240	314	10	160
PCH			264		11	176
LANES	1		2		2	

STEP 1 RIGHT TURN FROM C — CR

CONFLICTING FLOWS = MH =	272.	VPH
CRITICAL GAP = TG =	6.0	SECS
POTENTIAL CAPACITY = M1 =	725.	PCH
SHARED LANE - SEE STEP 3		
NO SHARED LANE DEMAND =	176	PCH
AVAILABLE RESERVE =	549.	PCH
DELAY & LOS =	A	

STEP 2 LEFT TURN FROM B — BL

CONFLICTING FLOWS = MH =	276.	VPH
CRITICAL GAP = TG =	5.5	SECS
POTENTIAL CAPACITY = M2 =	806.	PCH
DEMAND = BL =	264	PCH
CAPACITY USED =	32.74	%
IMPEDANCE FACTOR = P2 =	.749	
AVAILABLE RESERVE =	542.	PCH
DELAY & LOS =	A	

STEP 3 LEFT TURN FROM C — CL

CONFLICTING FLOWS = MH =	826.	VPH
CRITICAL GAP = TG =	6.5	SECS
POTENTIAL CAPACITY = M3 =	296.	PCH
ADJUSTING FOR IMPEDANCE = M3 =	222.	PCH

STEP 3 CONTINUED

	CL	
NO SHARED LANE DEMAND =	11	PCH
AVAILABLE RESERVE =	211.	PCH
DELAY & LOS =	C	
SHARED LANE DEMAND =	0	PCH
POTENTIAL CAPACITY = M13 =	0.	PCH
AVAILABLE RESERVE =	0.	PCH
DELAY & LOS =	N/A	

LOS C VOLUMES:	LEG C
VEHICLES PER HOUR	392.

VER 03/93

UNSIGNALIZED INTERSECTION CAPACITY CALCULATION FORM
4-WAY INTERSECTION 5/13/1998 16:30:52

FILE NAME: main9ex

CITY: Philomath
INTERSECTION: Main St. at 9th St.
ALTERNATE: Existing Cond.
COUNT: PM Peak
LOCATION PLAN:

ANALYST: bjd

METRO SIZE: LESS THAN 20,000
TYPE OF CONTROL: STOP

APPROACH CODES ARE

LANE	1	2	3	4
A	4	3		
B	4	3		
C	5			
D	5			

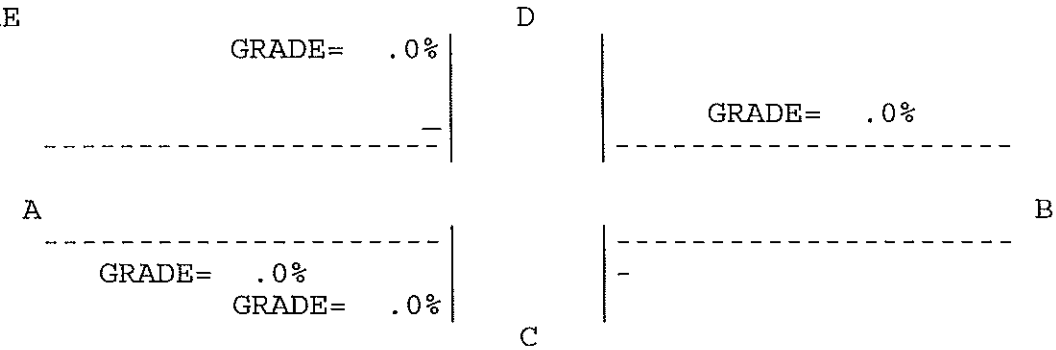

SPEED: 30 MPH
RESTRICTED SIGHT CODE IS 1
MINOR STREET ADJUSTMENTS -
ACCELERATION LANE? NO
CURB RADIUS OR TURN ANGLE? NO

APPR	A			B			C			D		
MOVE	AL	AT	AR	BL	BT	BR	CL	CT	CR	DL	DT	DR
VOL	5	550	5	5	795	32	5	5	5	30	5	70
PCH	6			6			6	6	6	33	6	77
LANES		2			2			1			1	

STEP 1	RIGHT TURN FROM C/D	CR	DR	
	CONFLICTING FLOWS = MH =	553.	811.	VPH
	CRITICAL GAP = TG =	5.5	5.5	SECS
	POTENTIAL CAPACITY = M1 =	579.	420.	PCH
	DEMAND =	6	77	PCH
	CAPACITY USED =	1.037	18.337	%
	IMPEDANCE FACTOR =	.994	.868	
	SHARED LANE - SEE STEP 3			
	NO SHARED LANE - RESERVE =	0.	0.	PCH
	DELAY & LOS =	N/A	N/A	

STEP 2 -	LEFT TURNS FROM B/A	BL	AL	
	CONFLICTING FLOWS = MH =	555.	827.	VPH
	CRITICAL GAP = TG =	5.0	5.0	SECS
	POTENTIAL CAPACITY = M2 =	670.	490.	PCH
	DEMAND =	6	6	PCH
	CAPACITY USED =	.90	1.22	%
	IMPEDANCE FACTOR =	.995	.993	
	AVAILABLE RESERVE =	664.	484.	PCH
	DELAY & LOS =	A	A	

STEP 3	THRU MOVEMENT FROM C/D	CT	DT	
	CONFLICTING FLOWS = MT =	1390.	1376.	VPH
	CRITICAL GAP = TG =	6.0	6.0	SECS
	POTENTIAL CAPACITY = MN3 =	149.	153.	PCH
	IMPEDANCE ADJUSTMENT = M3 =	148.	151.	PCH
	DEMAND =	6	6	PCH
	CAPACITY USED =	4.01	3.93	%
	IMPEDANCE FACTOR = P3 =	.974	.974	
	NO SHARED LANE			
	AVAILABLE RESERVE=	0.	0.	PCH
	DELAY & LOS =	N/A	N/A	
	SHARED LANE WITH LEFT TURN - SEE	STEP 4		
	SHARED LANE DEMAND =	0	0	PCH
	POTENTIAL CAPACITY = M13 =	0.	0.	PCH
	AVAILABLE RESERVE =	0.	0.	PCH
	DELAY & LOS =	N/A	N/A	

STEP 4 -	LEFT TURN FROM C/D	CL	DL	
	CONFLICTING FLOWS = MH =	1465.	1386.	VPH
	CRITICAL GAP = TG =	6.0	6.0	SECS
	POTENTIAL CAPACITY = MN =	133.	150.	PCH
	ADJUST FOR IMPEDANCE:	111.	144.	PCH
	NO SHARED LANE DEMAND =	0	0	PCH
	AVAILABLE RESERVE =	0.	0.	PCH
	DELAY & LOS =	N/A	N/A	
	WITH LEFT & THRU			
	SHARED LANE DEMAND =	0	0	PCH
	CAPACITY OF SHARED LANE =	0.	0.	PCH
	AVAILABLE RESERVE =	0.	0.	PCH
	DELAY & LOS =	N/A	N/A	
	WITH LEFT, THRU, & RIGHT			
	SHARED LANE DEMAND =	18	116	PCH
	CAPACITY OF SHARED LANE =	172.	256.	PCH
	AVAILABLE RESERVE =	154.	140.	PCH
	DELAY & LOS =	D	D	

LOS C VOLUMES:	FOR LEG C	FOR LEG D
VEHICLES PER HOUR	27.	27.

VER 03/93

UNSIGNALIZED - T - INTERSECTION CAPACITY CALCULATION FORM

5/13/1998 12:54:33

FILE NAME: main26ex

CITY: Philomath
INTERSECTION: Main St. at 26th St.
ALTERNATE: Existing Cond.
COUNT: PM Peak
LOCATION PLAN:

ANALYST: BJD

METRO SIZE: LESS THAN 20,000
TYPE OF CONTROL: STOP

APPROACH CODES ARE

LANE	1	2	3	4
A	4			
B	6			
C	7			

```
A                                                    B
-------------------|          |-------------------
     GRADE=   .0%  |          |-    GRADE=   .0%
                   |          |GRADE=   .0%
                   |     C    |
```

SPEED: 40 MPH
RESTRICTED SIGHT CODE IS 1
MINOR STREET ADJUSTMENTS -
ACCELERATION LANE? NO
CURB RADIUS OR TURN ANGLE? NO

APPROACH	A		B		C	
MOVE	AT	AR	BL	BT	CL	CR
VOLUME	530	20	25	700	20	20
PCH			28		22	22
LANES	1		1		1	

STEP 1 RIGHT TURN FROM C — CR

CONFLICTING FLOWS = MH =	540.	VPH
CRITICAL GAP = TG =	6.0	SECS
POTENTIAL CAPACITY = M1 =	509.	PCH
SHARED LANE - SEE STEP 3		
NO SHARED LANE DEMAND =	0	PCH
AVAILABLE RESERVE =	0.	PCH
DELAY & LOS =	N/A	

STEP 2 LEFT TURN FROM B — BL

CONFLICTING FLOWS = MH =	550.	VPH
CRITICAL GAP = TG =	5.5	SECS
POTENTIAL CAPACITY = M2 =	580.	PCH
DEMAND = BL =	28	PCH
CAPACITY USED =	4.82	%
IMPEDANCE FACTOR = P2 =	.968	
AVAILABLE RESERVE =	552.	PCH
DELAY & LOS =	A	

STEP 3 LEFT TURN FROM C — CL

CONFLICTING FLOWS = MH =	1265.	VPH
CRITICAL GAP = TG =	6.5	SECS
POTENTIAL CAPACITY = M3 =	142.	PCH
ADJUSTING FOR IMPEDANCE = M3 =	138.	PCH

STEP 3 CONTINUED

	CL	
NO SHARED LANE DEMAND =	0	PCH
AVAILABLE RESERVE =	0.	PCH
DELAY & LOS =	N/A	
SHARED LANE DEMAND =	44	PCH
POTENTIAL CAPACITY = M13 =	217.	PCH
AVAILABLE RESERVE =	173.	PCH
DELAY & LOS =	D	

	LEG C
LOS C VOLUMES:	
VEHICLES PER HOUR	75.

VER 03/93

UNSIGNALIZED INTERSECTION CAPACITY CALCULATION FORM
4-WAY INTERSECTION 5/ 4/1998 16:21:34

FILE NAME: app13ex

CITY: Philomath
INTERSECTION: Applegate St. at 13th St.
ALTERNATE: 1998 Existing
COUNT: PM Peak
LOCATION PLAN:

ANALYST: BJD
METRO SIZE: LESS THAN 20,000
TYPE OF CONTROL: STOP

APPROACH CODES ARE

LANE	1	2	3	4
A	5			
B	5			
C	5			
D	5			

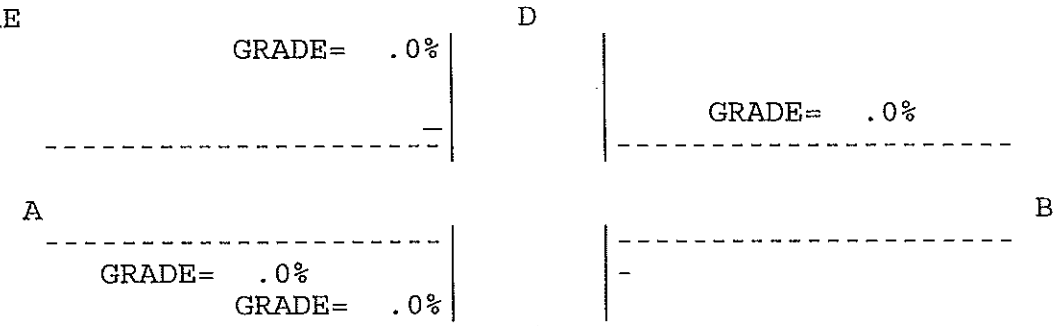

SPEED: 25 MPH
RESTRICTED SIGHT CODE IS 1
MINOR STREET ADJUSTMENTS -
ACCELERATION LANE? NO
CURB RADIUS OR TURN ANGLE? NO

APPR	A			B			C			D		
MOVE	AL	AT	AR	BL	BT	BR	CL	CT	CR	DL	DT	DR
VOL	22	54	37	19	56	18	38	84	21	42	69	47
PCH	24			21			42	92	23	46	76	52
LANES		1			1			1			1	

STEP 1	RIGHT TURN FROM C/D	CR	DR	
	CONFLICTING FLOWS = MH =	73.	65.	VPH
	CRITICAL GAP = TG =	5.5	5.5	SECS
	POTENTIAL CAPACITY = M1 =	1019.	1028.	PCH
	DEMAND =	23	52	PCH
	CAPACITY USED =	2.257	5.061	%
	IMPEDANCE FACTOR =	.986	.966	
	SHARED LANE - SEE STEP 3			
	NO SHARED LANE - RESERVE =	0.	0.	PCH
	DELAY & LOS =	N/A	N/A	

STEP 2 -	LEFT TURNS FROM B/A	BL	AL	
	CONFLICTING FLOWS = MH =	91.	74.	VPH
	CRITICAL GAP = TG =	5.0	5.0	SECS
	POTENTIAL CAPACITY = M2 =	1097.	1116.	PCH
	DEMAND =	21	24	PCH
	CAPACITY USED =	1.91	2.15	%
	IMPEDANCE FACTOR =	.988	.986	
	AVAILABLE RESERVE =	1076.	1092.	PCH
	DELAY & LOS =	A	A	

STEP 3	THRU MOVEMENT FROM C/D	CT	DT
	CONFLICTING FLOWS = MT =	188.	197. VPH
	CRITICAL GAP = TG =	6.0	6.0 SECS
	POTENTIAL CAPACITY = MN3 =	806.	796. PCH
	IMPEDANCE ADJUSTMENT = M3 =	785.	776. PCH
	DEMAND =	92	76 PCH
	CAPACITY USED =	11.42	9.55 %
	IMPEDANCE FACTOR = P3 =	.921	.934
	NO SHARED LANE		
	AVAILABLE RESERVE=	0.	0. PCH
	DELAY & LOS =	N/A	N/A
	SHARED LANE WITH LEFT TURN - SEE	STEP 4	
	SHARED LANE DEMAND =	0	0 PCH
	POTENTIAL CAPACITY = M13 =	0.	0. PCH
	AVAILABLE RESERVE =	0.	0. PCH
	DELAY & LOS =	N/A	N/A

STEP 4 -	LEFT TURN FROM C/D	CL	DL
	CONFLICTING FLOWS = MH =	304.	302. VPH
	CRITICAL GAP = TG =	6.0	6.0 SECS
	POTENTIAL CAPACITY = MN =	696.	697. PCH
	ADJUST FOR IMPEDANCE:	612.	616. PCH
	NO SHARED LANE DEMAND =	0	0 PCH
	AVAILABLE RESERVE =	0.	0. PCH
	DELAY & LOS =	N/A	N/A
	WITH LEFT & THRU		
	SHARED LANE DEMAND =	0	0 PCH
	CAPACITY OF SHARED LANE =	0.	0. PCH
	AVAILABLE RESERVE =	0.	0. PCH
	DELAY & LOS =	N/A	N/A
	WITH LEFT, THRU, & RIGHT		
	SHARED LANE DEMAND =	157	174 PCH
	CAPACITY OF SHARED LANE =	753.	779. PCH
	AVAILABLE RESERVE =	596.	605. PCH
	DELAY & LOS =	A	A

LOS C VOLUMES:	FOR LEG C	FOR LEG D
VEHICLES PER HOUR	530.	533.

VER 03/93

UNSIGNALIZED INTERSECTION CAPACITY CALCULATION FORM
4-WAY INTERSECTION 5/ 4/1998 16:23:27

FILE NAME: app19ex

CITY: Philomath
ANALYST: BJD
INTERSECTION: Applegate St. at 19th St.
ALTERNATE: 1998 Existing
METRO SIZE: LESS THAN 20,000
COUNT: PM Peak
TYPE OF CONTROL: STOP
LOCATION PLAN:

APPROACH CODES ARE

LANE	1	2	3	4
A	5			
B	5			
C	5			
D	5			

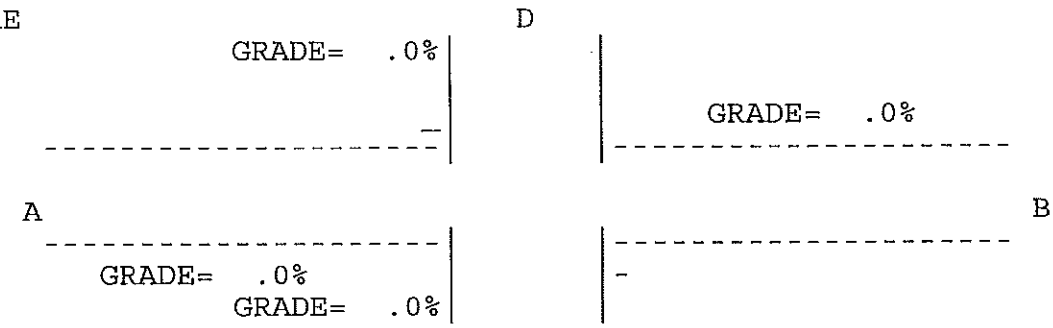

SPEED: 25 MPH
RESTRICTED SIGHT CODE IS 1
MINOR STREET ADJUSTMENTS -
ACCELERATION LANE? NO
CURB RADIUS OR TURN ANGLE? NO

APPR	A			B			C			D		
MOVE	AL	AT	AR	BL	BT	BR	CL	CT	CR	DL	DT	DR
VOL	24	77	51	22	53	8	16	39	18	27	30	27
PCH	26			24			18	43	20	30	33	30
LANES		1			1			1			1	

STEP 1 RIGHT TURN FROM C/D

	CR	DR	
CONFLICTING FLOWS = MH =	103.	57.	VPH
CRITICAL GAP = TG =	5.5	5.5	SECS
POTENTIAL CAPACITY = M1 =	985.	1037.	PCH
DEMAND =	20	30	PCH
CAPACITY USED =	2.031	2.893	%
IMPEDANCE FACTOR =	.987	.981	

SHARED LANE - SEE STEP 3

NO SHARED LANE - RESERVE =	0.	0.	PCH
DELAY & LOS =	N/A	N/A	

STEP 2 - LEFT TURNS FROM B/A

	BL	AL	
CONFLICTING FLOWS = MH =	128.	61.	VPH
CRITICAL GAP = TG =	5.0	5.0	SECS
POTENTIAL CAPACITY = M2 =	1057.	1131.	PCH
DEMAND =	24	26	PCH
CAPACITY USED =	2.27	2.30	%
IMPEDANCE FACTOR =	.985	.985	
AVAILABLE RESERVE =	1033.	1105.	PCH
DELAY & LOS =	A	A	

STEP 3	THRU MOVEMENT FROM C/D	CT	DT
	CONFLICTING FLOWS = MT =	210.	231. VPH
	CRITICAL GAP = TG =	6.0	6.0 SECS
	POTENTIAL CAPACITY = MN3 =	784.	763. PCH
	IMPEDANCE ADJUSTMENT = M3 =	761.	741. PCH
	DEMAND =	43	33 PCH
	CAPACITY USED =	5.49	4.33 %
	IMPEDANCE FACTOR = P3 =	.963	.971
	NO SHARED LANE		
	AVAILABLE RESERVE=	0.	0. PCH
	DELAY & LOS =	N/A	N/A
	SHARED LANE WITH LEFT TURN - SEE	STEP 4	
	SHARED LANE DEMAND =	0	0 PCH
	POTENTIAL CAPACITY = M13 =	0.	0. PCH
	AVAILABLE RESERVE =	0.	0. PCH
	DELAY & LOS =	N/A	N/A

STEP 4 -	LEFT TURN FROM C/D	CL	DL
	CONFLICTING FLOWS = MH =	267.	288. VPH
	CRITICAL GAP = TG =	6.0	6.0 SECS
	POTENTIAL CAPACITY = MN =	729.	710. PCH
	ADJUST FOR IMPEDANCE:	675.	655. PCH
	NO SHARED LANE DEMAND =	0	0 PCH
	AVAILABLE RESERVE =	0.	0. PCH
	DELAY & LOS =	N/A	N/A
	WITH LEFT & THRU		
	SHARED LANE DEMAND =	0	0 PCH
	CAPACITY OF SHARED LANE =	0.	0. PCH
	AVAILABLE RESERVE =	0.	0. PCH
	DELAY & LOS =	N/A	N/A
	WITH LEFT, THRU, & RIGHT		
	SHARED LANE DEMAND =	81	93 PCH
	CAPACITY OF SHARED LANE =	783.	780. PCH
	AVAILABLE RESERVE =	702.	687. PCH
	DELAY & LOS =	A	A

LOS C VOLUMES:	FOR LEG C	FOR LEG D
VEHICLES PER HOUR	492.	452.

VER 03/93

INTERSECTION 1
SCENARIO 2
OCTOBER 12, 1998

INTERSECTION = 1 SCENARIO = 2 DATE/TIME: 10/12/98 12:55:44 PM

PROJECT: Philomath TSP ANALYST: BJD

File: S:\TRANS\PROJECT\ODOT0254\WORKFILE\OPERATIO\SIGOPER.SIG

CITY: Philomath PEAK HOUR: PM Peak

DESCRIPTION: 2015 No Build

INTERSECTION LOS = D

SATURATION = 81%

C= 90 G=81 Y= 9

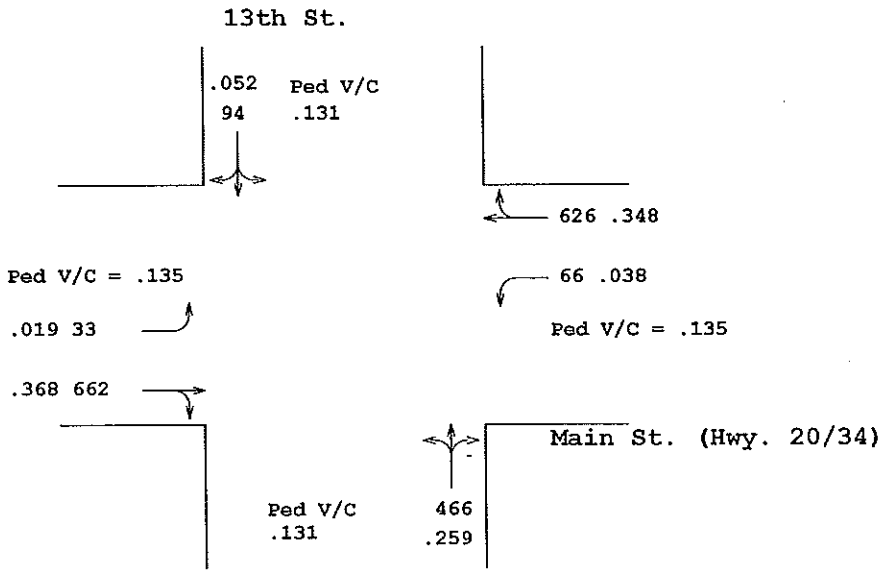

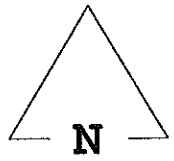

SIGCAP 2

N-S V/C = .272
E-W V/C = .434
TOTAL AMBER = .100
MINIMUM V/C = .067

XXX = Adjusted Volumes .XXX = V/C

APPR	MOVMENT VOLUMES L	T	R	TOT	MOVE SATURATION L	T	R	MOVEMENT LOS L	T	R
SOUTH	256	88	122	466	81%	81%	77%	D	D	D
NORTH	23	66	5	94	81%	81%	24%	D	D	A
WEST	33	513	149	695	30%	81%	81%	A	D	D
EAST	66	594	32	692	50%	77%	77%	B	D	D

APPR	TRUCKS %	PED DIST	LANE WIDTH	PHASING
SOUTH	2.0%	50ft	12.ft	N-S -LEFT TURNS NOT PROTECTED
NORTH	2.0%	50ft	12.ft	
WEST	5.0%	48ft	12.ft	E-W -LEFT TURNS PROTECTED WITH OVERLAP
EAST	5.0%	48ft	12.ft	

LEG	LEG VOL AT LOS C
SOUTH	655
NORTH	217
WEST	1360
EAST	1185

APPR	TIME AVAIL(sec) L	T	R	RED TIME(sec) L	T	R	MOVE STORAGE(ft) L	T	R
SOUTH	31.2	31.2	31.2	55.8	55.8	55.8	381	381	381
NORTH	31.2	31.2	31.2	55.8	55.8	55.8	77	77	77
WEST	7.6	42.2	42.2	79.4	44.8	44.8	38	440	440
EAST	7.6	42.2	42.2	79.4	44.8	44.8	75	416	416

INTERSECTION = 2 SCENARIO = 2 DATE/TIME: 6/3/98 11:29:57 AM

PROJECT: Philomath TSP ANALYST: BJD

File: S:\TRANS\PROJECT\ODOT0254\WORKFILE\OPERATIO\SIGOPER.SIG

CITY: Philomath POPULATION: Fewer than 20,000

DESCRIPTION: 2015 No Build

INTERSECTION LOS = E

SATURATION = 90%

C= 90 G=81 Y= 9

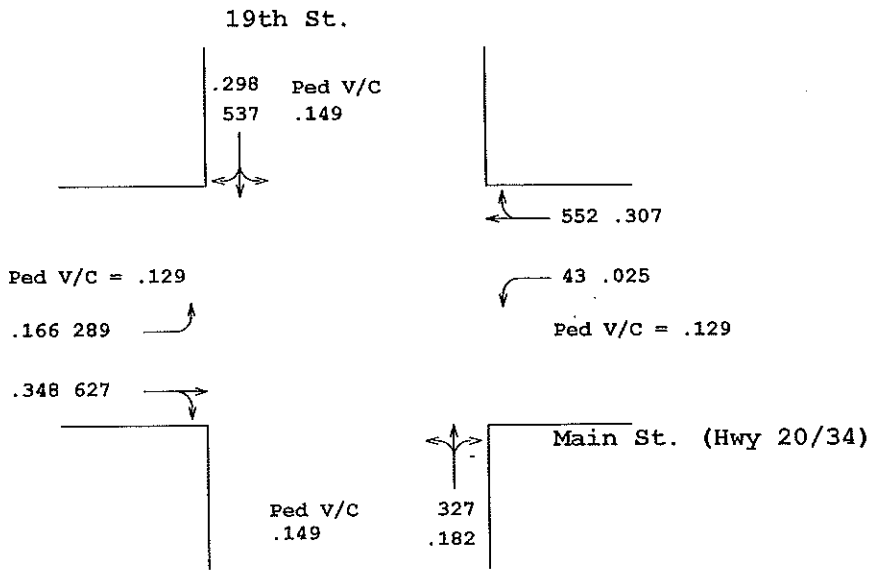

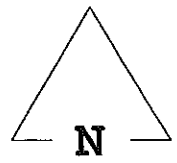

SIGCAP 2

N-S V/C = .332
E-W V/C = .473
TOTAL AMBER = .100
MINIMUM V/C = .067

XXX = Adjusted Volumes .XXX = V/C

APPR	MOVMENT VOLUMES L	T	R	TOT	MOVE SATURATION L	T	R	MOVEMENT LOS L	T	R
SOUTH	59	222	46	327	90%	90%	54%	E	E	B
NORTH	46	216	254	516	90%	90%	82%	E	E	D
WEST	265	540	35	840	90%	79%	79%	E	D	D
EAST	40	489	27	556	40%	90%	90%	A	E	E

APPR	TRUCKS %	PED DIST	LANE WIDTH	PHASING
SOUTH	5.0%	22ft	12.ft	N-S -LEFT TURNS NOT PROTECTED
NORTH	9.0%	40ft	12.ft	
WEST	14.0%	48ft	12.ft	E-W -LEFT TURNS PROTECTED WITH OVERLAP
EAST	12.0%	48ft	12.ft	

LEG	LEG VOL AT LOS C
SOUTH	476
NORTH	794
WEST	1265
EAST	915

APPR	TIME AVAIL(sec) L	T	R	RED TIME(sec) L	T	R	MOVE STORAGE(ft) L	T	R
SOUTH	33.4	33.4	33.4	53.6	53.6	53.6	257	257	257
NORTH	33.4	33.4	33.4	53.6	53.6	53.6	422	422	422
WEST	16.7	40.9	40.9	70.3	46.1	46.1	294	428	428
EAST	6.7	30.9	30.9	80.3	56.1	56.1	50	453	453

UNSIGNALIZED - T - INTERSECTION CAPACITY CALCULATION FORM

5/ 5/1998 12:47:27

FILE NAME: hy2034no

CITY: Philomath
INTERSECTION: Highway 20 at Highway 34
ALTERNATE: ~~1998 Existing~~ NO BUILD
COUNT: PM Peak
LOCATION PLAN:

ANALYST: BJD
METRO SIZE: LESS THAN 20,000
TYPE OF CONTROL: STOP

APPROACH CODES ARE

LANE	1	2	3	4
A	4			
B	2	3		
C	1	3		

A: GRADE= .0%

B: GRADE= .0%

C: GRADE= .0%

SPEED: 45 MPH
RESTRICTED SIGHT CODE IS 1
MINOR STREET ADJUSTMENTS -
ACCELERATION LANE? NO
CURB RADIUS OR TURN ANGLE? NO

APPROACH	A		B		C	
MOVE	AT	AR	BL	BT	CL	CR
VOLUME	512	9	368	699	10	219
PCH			405		11	241
LANES	1		2		2	

STEP 1 RIGHT TURN FROM C — CR

CONFLICTING FLOWS = MH =	517.	VPH
CRITICAL GAP = TG =	6.0	SECS
POTENTIAL CAPACITY = M1 =	525.	PCH

SHARED LANE - SEE STEP 3

NO SHARED LANE DEMAND =	241	PCH
AVAILABLE RESERVE =	284.	PCH
DELAY & LOS =	C	

STEP 2 LEFT TURN FROM B — BL

CONFLICTING FLOWS = MH =	521.	VPH
CRITICAL GAP = TG =	5.5	SECS
POTENTIAL CAPACITY = M2 =	601.	PCH
DEMAND = BL =	405	PCH
CAPACITY USED =	67.34	%
IMPEDANCE FACTOR = P2 =	.409	
AVAILABLE RESERVE =	196.	PCH
DELAY & LOS =	D	

STEP 3 LEFT TURN FROM C — CL

CONFLICTING FLOWS = MH =	1584.	VPH
CRITICAL GAP = TG =	6.5	SECS
POTENTIAL CAPACITY = M3 =	80.	PCH
ADJUSTING FOR IMPEDANCE = M3 =	33.	PCH

STEP 3 CONTINUED CL

NO SHARED LANE DEMAND =	11	PCH
AVAILABLE RESERVE =	22.	PCH
DELAY & LOS =	E	
SHARED LANE DEMAND =	0	PCH
POTENTIAL CAPACITY = M13 =	0.	PCH
AVAILABLE RESERVE =	0.	PCH
DELAY & LOS =	N/A	

LOS C VOLUMES:	LEG C
VEHICLES PER HOUR	320.

VER 03/93

UNSIGNALIZED INTERSECTION CAPACITY CALCULATION FORM
4-WAY INTERSECTION 5/13/1998 16:32:25

FILE NAME: main9no

CITY: Philomath
INTERSECTION: Main St. at 9th St.
ALTERNATE: 2015- No Build
COUNT: PM Peak
LOCATION PLAN:

ANALYST: bjd

METRO SIZE: LESS THAN 20,000
TYPE OF CONTROL: STOP

APPROACH CODES ARE

LANE	1	2	3	4
A	4	3		
B	4	3		
C	5			
D	5			

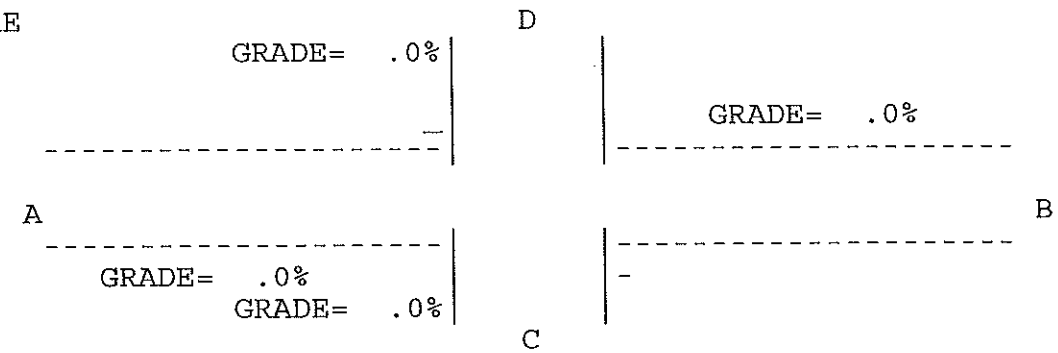

SPEED: 30 MPH
RESTRICTED SIGHT CODE IS 1
MINOR STREET ADJUSTMENTS -
ACCELERATION LANE? NO
CURB RADIUS OR TURN ANGLE? NO

APPR	A			B			C			D		
MOVE	AL	AT	AR	BL	BT	BR	CL	CT	CR	DL	DT	DR
VOL	216	650	5	5	864	63	5	5	5	92	5	520
PCH	238			6			6	6	6	101	6	572
LANES		2			2			1			1	

STEP 1		CR	DR	
	RIGHT TURN FROM C/D			
	CONFLICTING FLOWS = MH =	653.	896.	VPH
	CRITICAL GAP = TG =	5.5	5.5	SECS
	POTENTIAL CAPACITY = M1 =	512.	378.	PCH
	DEMAND =	6	572	PCH
	CAPACITY USED =	1.173	******	%
	IMPEDANCE FACTOR =	.993	-.737	
	SHARED LANE - SEE STEP 3			
	NO SHARED LANE - RESERVE =	0.	0.	PCH
	DELAY & LOS =	N/A	N/A	

STEP 2 -		BL	AL	
	LEFT TURNS FROM B/A			
	CONFLICTING FLOWS = MH =	655.	927.	VPH
	CRITICAL GAP = TG =	5.0	5.0	SECS
	POTENTIAL CAPACITY = M2 =	598.	435.	PCH
	DEMAND =	6	238	PCH
	CAPACITY USED =	1.00	54.69	%
	IMPEDANCE FACTOR =	.994	.542	
	AVAILABLE RESERVE =	592.	197.	PCH
	DELAY & LOS =	A	D	

STEP 3	THRU MOVEMENT FROM C/D	CT	DT
	CONFLICTING FLOWS = MT =	1801.	1772. VPH
	CRITICAL GAP = TG =	6.0	6.0 SECS
	POTENTIAL CAPACITY = MN3 =	76.	81. PCH
	IMPEDANCE ADJUSTMENT = M3 =	41.	43. PCH
	DEMAND =	6	6 PCH
	CAPACITY USED =	7.87	7.45 %
	IMPEDANCE FACTOR = P3 =	.946	.949
	NO SHARED LANE		
	AVAILABLE RESERVE=	0.	0. PCH
	DELAY & LOS =	N/A	N/A
	SHARED LANE WITH LEFT TURN - SEE	STEP 4	
	SHARED LANE DEMAND =	0	0 PCH
	POTENTIAL CAPACITY = M13 =	0.	0. PCH
	AVAILABLE RESERVE =	0.	0. PCH
	DELAY & LOS =	N/A	N/A

STEP 4 -	LEFT TURN FROM C/D	CL	DL
	CONFLICTING FLOWS = MH =	2326.	1782. VPH
	CRITICAL GAP = TG =	6.0	6.0 SECS
	POTENTIAL CAPACITY = MN =	-6.	79. PCH
	ADJUST FOR IMPEDANCE:	2.	40. PCH
	NO SHARED LANE DEMAND =	0	0 PCH
	AVAILABLE RESERVE =	0.	0. PCH
	DELAY & LOS =	N/A	N/A
	WITH LEFT & THRU		
	SHARED LANE DEMAND =	0	0 PCH
	CAPACITY OF SHARED LANE =	0.	0. PCH
	AVAILABLE RESERVE =	0.	0. PCH
	DELAY & LOS =	N/A	N/A
	WITH LEFT, THRU, & RIGHT		
	SHARED LANE DEMAND =	18	679 PCH
	CAPACITY OF SHARED LANE =	6.	163. PCH
	AVAILABLE RESERVE =	-12.	-516. PCH
	DELAY & LOS =	F	F

LOS C VOLUMES:	FOR LEG C	FOR LEG D
VEHICLES PER HOUR	16.	15.

VER 03/93

UNSIGNALIZED - T - INTERSECTION CAPACITY CALCULATION FORM

5/13/1998 13: 5:59

FILE NAME: main26no

CITY: Philomath
INTERSECTION: Main St. at 26th St.
ALTERNATE: ~~Existing~~ ~~Cond.~~ NO BUILD
COUNT: PM Peak
LOCATION PLAN:

ANALYST: BJD

METRO SIZE: LESS THAN 20,000
TYPE OF CONTROL: STOP

APPROACH CODES ARE

LANE	1	2	3	4
A	4			
B	6			
C	7			

A — GRADE= .0%

B — GRADE= .0%

C — GRADE= .0%

SPEED: 40 MPH
RESTRICTED SIGHT CODE IS 1
MINOR STREET ADJUSTMENTS -
ACCELERATION LANE? NO
CURB RADIUS OR TURN ANGLE? NO

APPROACH	A		B		C	
MOVE	AT	AR	BL	BT	CL	CR
VOLUME	565	35	43	710	28	36
PCH			47		31	40
LANES	1		1		1	

STEP 1 RIGHT TURN FROM C — CR

CONFLICTING FLOWS = MH =	583.	VPH
CRITICAL GAP = TG =	6.0	SECS
POTENTIAL CAPACITY = M1 =	480.	PCH
SHARED LANE - SEE STEP 3		
NO SHARED LANE DEMAND =	0	PCH
AVAILABLE RESERVE =	0.	PCH
DELAY & LOS =	N/A	

STEP 2 LEFT TURN FROM B — BL

CONFLICTING FLOWS = MH =	600.	VPH
CRITICAL GAP = TG =	5.5	SECS
POTENTIAL CAPACITY = M2 =	546.	PCH
DEMAND = BL =	47	PCH
CAPACITY USED =	8.61	%
IMPEDANCE FACTOR = P2 =	.941	
AVAILABLE RESERVE =	499.	PCH
DELAY & LOS =	A	

STEP 3 LEFT TURN FROM C — CL

CONFLICTING FLOWS = MH =	1336.	VPH
CRITICAL GAP = TG =	6.5	SECS
POTENTIAL CAPACITY = M3 =	125.	PCH
ADJUSTING FOR IMPEDANCE = M3 =	118.	PCH

STEP 3 CONTINUED

	CL	
NO SHARED LANE DEMAND =	0	PCH
AVAILABLE RESERVE =	0.	PCH
DELAY & LOS =	N/A	
SHARED LANE DEMAND =	71	PCH
POTENTIAL CAPACITY = M13 =	205.	PCH
AVAILABLE RESERVE =	134.	PCH
DELAY & LOS =	D	

	LEG C
LOS C VOLUMES:	
VEHICLES PER HOUR	117.

VER 03/93

INTERSECTION 8
SCENARIO 1
MAY 19, 1998

INTERSECTION = 8 SCENARIO = 1 DATE/TIME: 5/19/98 3:46:47 PM

PROJECT: Philomath TSP ANALYST: BJD

File: S:\TRANS\PROJECT\ODOT0254\WORKFILE\OPERATIO\SIGOPER2.SIG

CITY: Philomath PEAK HOUR: Fewer than 20,000

DESCRIPTION: 2015- TSM Improvement - Traffic Signal

INTERSECTION LOS = C-D

SATURATION = 72%

C= 90 G=81 Y= 9

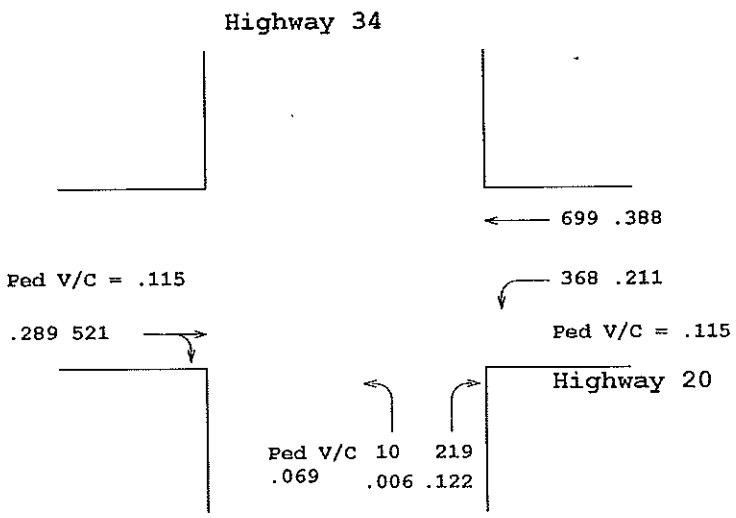

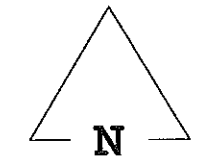

SIGCAP 2

N-S V/C = .122
E-W V/C = .501
TOTAL AMBER = .100
MINIMUM V/C = .067

XXX = Adjusted Volumes .XXX = V/C

APPR	MOVMENT VOLUMES L	T	R	TOT	MOVE SATURATION L	T	R	MOVEMENT LOS L	T	R
SOUTH	10	0	219	229	48%	0%	72%	A	...	C-D
NORTH	0	0	0	0	0%	0%	0%	...	...	...
WEST	0	512	9	521	0%	72%	72%	...	C-D	C-D
EAST	368	699	0	1067	72%	58%	0%	C-D	B	...

APPR	TRUCKS %	PED DIST	LANE WIDTH	PHASING
SOUTH	5.0%	48ft	12.ft	N-S -LEFT TURNS NOT PROTECTED
NORTH	5.0%	48ft	12.ft	
WEST	5.0%	24ft	12.ft	E-W -LEFT TURNS PROTECTED WITH OVERLAP
EAST	5.0%	24ft	12.ft	

LEG	LEG VOL AT LOS C
SOUTH	603
NORTH	0
WEST	1225
EAST	1790

APPR	TIME AVAIL(sec) L	T	R	RED TIME(sec) L	T	R	MOVE STORAGE(ft) L	T	R
SOUTH	15.8	0.0	15.8	71.2	0.0	71.2	10	0	226
NORTH	0.0	0.0	0.0	0.0	0.0	0.0	0	0	0
WEST	0.0	37.7	37.7	0.0	49.3	49.3	0	379	379
EAST	27.5	65.2	0.0	59.5	21.8	0.0	319	241	0

INTERSECTION = 1 SCENARIO = 1 DATE/TIME: 5/13/98 4:26:42 PM

PROJECT: Philomath TSP ANALYST: BJD
File: C:\SIGCAP2\SIGOPER2.SIG PEAK HOUR: PM Peak
CITY: Philomath POPULATION: Fewer Than 20,000
DESCRIPTION: 2015- TSM Improvement- Traffic Signal at 9th St.

INTERSECTION LOS = E
SATURATION = 91%

C= 90 G=81 Y= 9

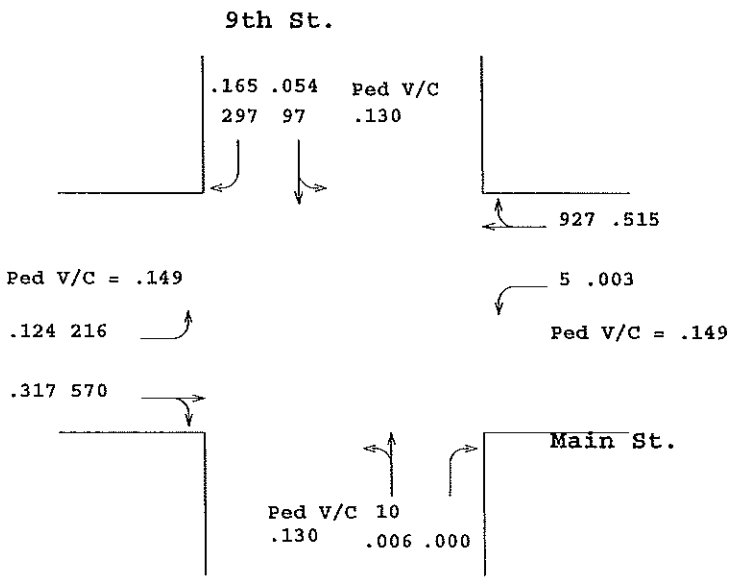

N-S V/C = .168
E-W V/C = .639
TOTAL AMBER = .100
MINIMUM V/C = .067

XXX = Adjusted Volumes .XXX = V/C

APPR	MOVMENT VOLUMES L	T	R	TOT	MOVE SATURATION L	T	R	MOVEMENT LOS L	T	R
SOUTH	5	5	5	15	91%	91%	0%	E	E	A
NORTH	92	5	520	617	91%	91%	56%	E	E	B
WEST	216	565	5	786	91%	55%	55%	E	B	B
EAST	5	864	63	932	13%	91%	91%	A	E	E

APPR	TRUCKS %	PED DIST	LANE WIDTH	PHASING
SOUTH	5.0%	48ft	12.ft	N-S -LEFT TURNS NOT PROTECTED
NORTH	5.0%	48ft	12.ft	N-S - Right Turn Overlap
WEST	5.0%	40ft	12.ft	E-W -LEFT TURNS PROTECTED WITH OVERLAP
EAST	5.0%	40ft	12.ft	

LEG	LEG VOL AT LOS C
SOUTH	23
NORTH	692
WEST	1671
EAST	1225

APPR	TIME AVAIL(sec) L	T	R	RED TIME(sec) L	T	R	MOVE STORAGE(ft) L	T	R
SOUTH	16.8	16.8	23.5	70.2	70.2	63.5	10	10	5
NORTH	16.8	16.8	29.3	70.2	70.2	57.7	99	99	438
WEST	12.5	57.5	57.5	74.5	29.5	29.5	233	258	258
EAST	6.7	51.7	51.7	80.3	35.3	35.3	6	493	493

INTERSECTION = 2 SCENARIO = 1 DATE/TIME: 5/13/98 4:27:03 PM

PROJECT: Philomath TSP ANALYST: BJD
File: C:\SIGCAP2\SIGOPER2.SIG PEAK HOUR: PM Peak
CITY: Philomath POPULATION: Fewer Than 20,000
DESCRIPTION: 2015- TSM Improvements- Traffic Signal at 26th St.

INTERSECTION LOS = B
SATURATION = 56%

C= 90 G=81 Y= 9

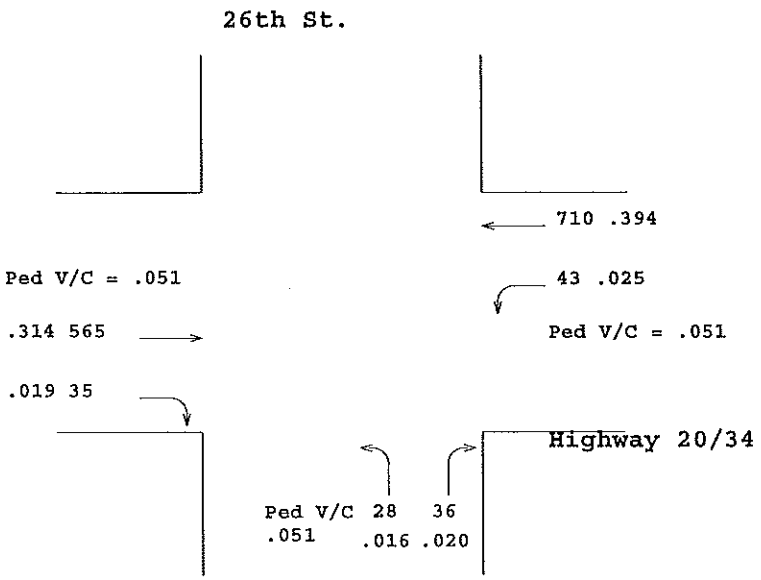

N
SIGCAP 2

N-S V/C = .067
E-W V/C = .394
TOTAL AMBER = .100
MINIMUM V/C = .067

XXX = Adjusted Volumes .XXX = V/C

APPR	MOVMENT VOLUMES L	T	R	TOT	MOVE SATURATION L	T	R	MOVEMENT LOS L	T	R
SOUTH	28	0	36	64	56%	0%	24%	B	...	A
NORTH	0	0	0	0	0%	0%	0%	...	...	...
WEST	0	565	35	600	0%	54%	13%	...	B	A
EAST	43	710	0	753	27%	56%	0%	A	B	...

APPR	TRUCKS %	PED DIST	LANE WIDTH	PHASING
SOUTH	5.0%	24ft	12.ft	N-S -LEFT TURNS NOT PROTECTED
NORTH	5.0%	24ft	12.ft	
WEST	5.0%	24ft	12.ft	E-W -LEFT TURNS PROTECTED WITH OVERLAP
EAST	5.0%	24ft	12.ft	

LEG	LEG VOL AT LOS C
SOUTH	191
NORTH	0
WEST	1799
EAST	1821

APPR	TIME AVAIL(sec) L	T	R	RED TIME(sec) L	T	R	MOVE STORAGE(ft) L	T	R
SOUTH	11.7	0.0	11.7	75.3	0.0	75.3	30	0	39
NORTH	0.0	0.0	0.0	0.0	0.0	0.0	0	0	0
WEST	0.0	57.6	57.6	0.0	29.4	29.4	0	254	16
EAST	11.7	69.3	0.0	75.3	17.7	0.0	47	204	0

UNSIGNALIZED INTERSECTION CAPACITY CALCULATION FORM
4-WAY INTERSECTION 5/15/1998 10:30: 5

FILE NAME: main9wh

CITY: Philomath
INTERSECTION: Main St. at 9th St.
ALTERNATE: 2015-West Hills Rd E
COUNT: PM Peak
LOCATION PLAN:

ANALYST: bjd

METRO SIZE: LESS THAN 20,000
TYPE OF CONTROL: STOP

APPROACH CODES ARE

LANE	1	2	3	4
A	4	3		
B	4	3		
C	5			
D	5			

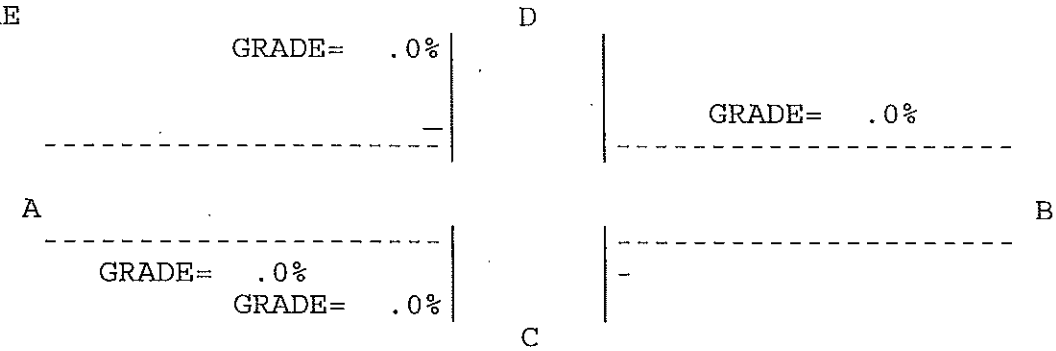

SPEED: 30 MPH
RESTRICTED SIGHT CODE IS 1
MINOR STREET ADJUSTMENTS -
ACCELERATION LANE? NO
CURB RADIUS OR TURN ANGLE? NO

APPR	A			B			C			D		
MOVE	AL	AT	AR	BL	BT	BR	CL	CT	CR	DL	DT	DR
VOL	17	459	5	5	646	107	5	5	5	125	5	38
PCH	19			6			6	6	6	138	6	42
LANES		2			2			1			1	

STEP 1 RIGHT TURN FROM C/D

	CR	DR	
CONFLICTING FLOWS = MH =	462.	700.	VPH
CRITICAL GAP = TG =	5.5	5.5	SECS
POTENTIAL CAPACITY = M1 =	646.	483.	PCH
DEMAND =	6	42	PCH
CAPACITY USED =	.928	8.702	%
IMPEDANCE FACTOR =	.995	.941	

SHARED LANE - SEE STEP 3

NO SHARED LANE - RESERVE =	0.	0.	PCH
DELAY & LOS =	N/A	N/A	

STEP 2 - LEFT TURNS FROM B/A

	BL	AL	
CONFLICTING FLOWS = MH =	464.	753.	VPH
CRITICAL GAP = TG =	5.0	5.0	SECS
POTENTIAL CAPACITY = M2 =	740.	534.	PCH
DEMAND =	6	19	PCH
CAPACITY USED =	.81	3.55	%
IMPEDANCE FACTOR =	.995	.977	
AVAILABLE RESERVE =	734.	515.	PCH
DELAY & LOS =	A	A	

STEP 3	THRU MOVEMENT FROM C/D	CT	DT
	CONFLICTING FLOWS = MT =	1237.	1186. VPH
	CRITICAL GAP = TG =	6.0	6.0 SECS
	POTENTIAL CAPACITY = MN3 =	188.	202. PCH
	IMPEDANCE ADJUSTMENT = M3 =	183.	197. PCH
	DEMAND =	6	6 PCH
	CAPACITY USED =	3.20	2.96 %
	IMPEDANCE FACTOR = P3 =	.979	.981
	NO SHARED LANE		
	AVAILABLE RESERVE=	0.	0. PCH
	DELAY & LOS =	N/A	N/A
	SHARED LANE WITH LEFT TURN - SEE	STEP 4	
	SHARED LANE DEMAND =	0	0 PCH
	POTENTIAL CAPACITY = M13 =	0.	0. PCH
	AVAILABLE RESERVE =	0.	0. PCH
	DELAY & LOS =	N/A	N/A

STEP 4 -	LEFT TURN FROM C/D	CL	DL
	CONFLICTING FLOWS = MH =	1280.	1196. VPH
	CRITICAL GAP = TG =	6.0	6.0 SECS
	POTENTIAL CAPACITY = MN =	176.	199. PCH
	ADJUST FOR IMPEDANCE:	158.	189. PCH
	NO SHARED LANE DEMAND =	0	0 PCH
	AVAILABLE RESERVE =	0.	0. PCH
	DELAY & LOS =	N/A	N/A
	WITH LEFT & THRU		
	SHARED LANE DEMAND =	0	0 PCH
	CAPACITY OF SHARED LANE =	0.	0. PCH
	AVAILABLE RESERVE =	0.	0. PCH
	DELAY & LOS =	N/A	N/A
	WITH LEFT, THRU, & RIGHT		
	SHARED LANE DEMAND =	18	186 PCH
	CAPACITY OF SHARED LANE =	225.	219. PCH
	AVAILABLE RESERVE =	207.	33. PCH
	DELAY & LOS =	C	E

LOS C VOLUMES:	FOR LEG C	FOR LEG D
VEHICLES PER HOUR	30.	23.

VER 03/93

UNSIGNALIZED INTERSECTION CAPACITY CALCULATION FORM
4-WAY INTERSECTION 5/15/1998 10:37:31

FILE NAME: main9cp

CITY: Philomath
INTERSECTION: Main St. at 9th St.
ALTERNATE: 2015-Couplet Alt. 1
COUNT: PM Peak
LOCATION PLAN:

ANALYST: bjd

METRO SIZE: LESS THAN 20,000
TYPE OF CONTROL: STOP

APPROACH CODES ARE

LANE	1	2	3	4
A	0			
B	4	6		
C	6			
D	4			

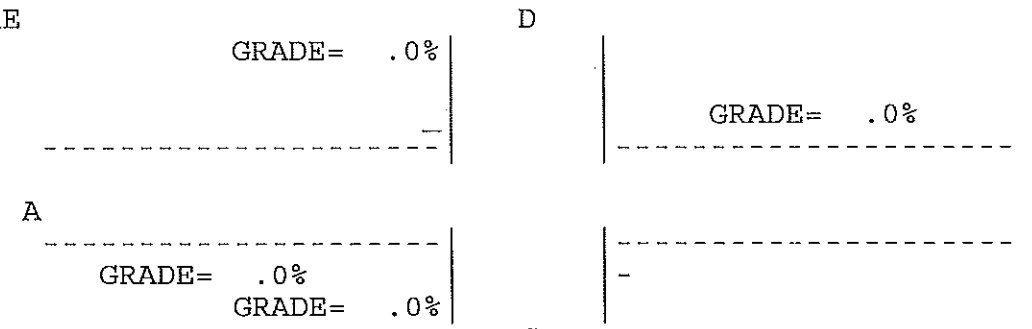

SPEED: 30 MPH
RESTRICTED SIGHT CODE IS 1
MINOR STREET ADJUSTMENTS -
ACCELERATION LANE? NO
CURB RADIUS OR TURN ANGLE? NO

APPR	A			B			C			D		
MOVE	AL	AT	AR	BL	BT	BR	CL	CT	CR	DL	DT	DR
VOL	0	0	0	50	1230	70	5	30	0	0	50	163
PCH	0			55			6	33	0	0	55	179
LANES		0			2			1			1	

STEP 1	RIGHT TURN FROM C/D	CR	DR	
	CONFLICTING FLOWS = MH =	0.	650.	VPH
	CRITICAL GAP = TG =	5.5	5.5	SECS
	POTENTIAL CAPACITY = M1 =	1105.	513.	PCH
	DEMAND =	0	179	PCH
	CAPACITY USED =	.000	34.876	%
	IMPEDANCE FACTOR =	1.001	.730	
	SHARED LANE - SEE STEP 3			
	NO SHARED LANE - RESERVE =	0.	0.	PCH
	DELAY & LOS =	N/A	N/A	

STEP 2 -	LEFT TURNS FROM B/A	BL	AL	
	CONFLICTING FLOWS = MH =	0.	0.	VPH
	CRITICAL GAP = TG =	5.0	5.0	SECS
	POTENTIAL CAPACITY = M2 =	1202.	272.	PCH
	DEMAND =	55	0	PCH
	CAPACITY USED =	4.57	.00	%
	IMPEDANCE FACTOR =	.970	1.001	
	AVAILABLE RESERVE =	1147.	0.	PCH
	DELAY & LOS =	A	N/A	

STEP 3	THRU MOVEMENT FROM C/D	CT	DT
	CONFLICTING FLOWS = MT =	1350.	1315. VPH
	CRITICAL GAP = TG =	6.0	6.0 SECS
	POTENTIAL CAPACITY = MN3 =	159.	167. PCH
	IMPEDANCE ADJUSTMENT = M3 =	154.	162. PCH
	DEMAND =	33	55 PCH
	CAPACITY USED =	20.81	32.92 %
	IMPEDANCE FACTOR = P3 =	.849	.748
	NO SHARED LANE		
	AVAILABLE RESERVE=	0.	0. PCH
	DELAY & LOS =	N/A	N/A
	SHARED LANE WITH LEFT TURN - SEE STEP 4		
	SHARED LANE DEMAND =	0	234 PCH
	POTENTIAL CAPACITY = M13 =	0.	340. PCH
	AVAILABLE RESERVE =	0.	106. PCH
	DELAY & LOS =	N/A	D

STEP 4 -	LEFT TURN FROM C/D	CL	DL
	CONFLICTING FLOWS = MH =	1563.	1345. VPH
	CRITICAL GAP = TG =	6.0	6.0 SECS
	POTENTIAL CAPACITY = MN =	115.	160. PCH
	ADJUST FOR IMPEDANCE:	61.	132. PCH
	NO SHARED LANE DEMAND =	0	0 PCH
	AVAILABLE RESERVE =	0.	0. PCH
	DELAY & LOS =	N/A	N/A
	WITH LEFT & THRU		
	SHARED LANE DEMAND =	39	0 PCH
	CAPACITY OF SHARED LANE =	124.	0. PCH
	AVAILABLE RESERVE =	85.	0. PCH
	DELAY & LOS =	E	N/A
	WITH LEFT, THRU, & RIGHT		
	SHARED LANE DEMAND =	0	0 PCH
	CAPACITY OF SHARED LANE =	0.	0. PCH
	AVAILABLE RESERVE =	0.	0. PCH
	DELAY & LOS =	N/A	N/A

LOS C VOLUMES:	FOR LEG C	FOR LEG D
VEHICLES PER HOUR	102.	118.

VER 03/93

INTERSECTION 1
SCENARIO 2
MAY 18, 1998

INTERSECTION = 1 SCENARIO = 2 DATE/TIME: 5/18/98 4:10:59 PM

PROJECT: Philomath TSP
File: C:\SIGCAP2\SIGOPER2.SIG
CITY: Philomath
DESCRIPTION: 2015- Couplet Alt. 1a

ANALYST: BJD
PEAK HOUR: PM Peak
POPULATION: Fewer Than 20,000

INTERSECTION LOS = B
SATURATION = 51%

C= 90 G=84 Y= 6

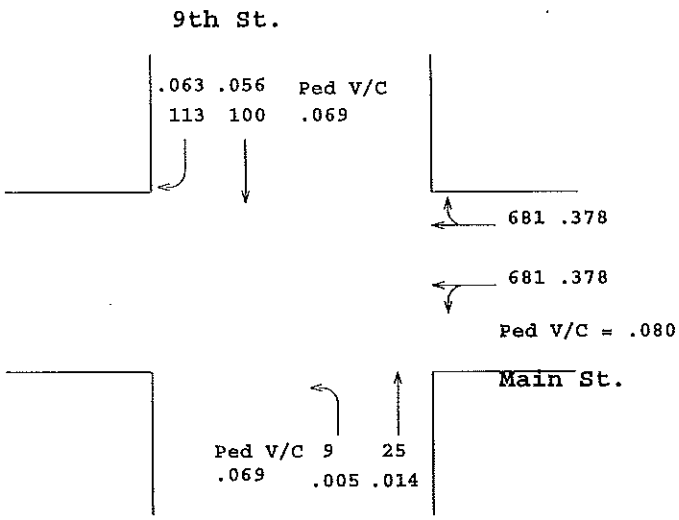

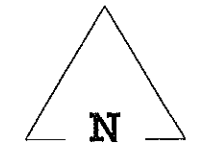

SIGCAP 2

N-S V/C = .069
E-W V/C = .378
TOTAL AMBER = .067
MINIMUM V/C = .067

XXX = Adjusted Volumes .XXX = V/C

APPR	MOVMENT VOLUMES L	T	R	TOT	MOVE SATURATION L	T	R	MOVEMENT LOS L	T	R
SOUTH	9	25	0	34	51%	16%	0%	B	A	...
NORTH	0	100	113	213	0%	43%	47%	...	A	A
WEST	0	0	0	0	0%	0%	0%	...	...	...
EAST	5	1279	78	1362	51%	51%	51%	B	B	B

APPR	TRUCKS %	PED DIST	LANE WIDTH	PHASING
SOUTH	5.0%	48ft	12.ft	N-S -LEFT TURNS NOT PROTECTED
NORTH	5.0%	48ft	12.ft	N-S - Right Turn Overlap
WEST	5.0%	40ft	12.ft	E-W -LEFT TURNS NOT PROTECTED
EAST	5.0%	40ft	12.ft	

LEG	LEG VOL AT LOS C
SOUTH	203
NORTH	461
WEST	2046
EAST	1989

APPR	TIME AVAIL(sec) L	T	R	RED TIME(sec) L	T	R	MOVE STORAGE(ft) L	T	R
SOUTH	13.0	13.0	0.0	74.0	74.0	0.0	10	27	0
NORTH	0.0	13.0	13.0	0.0	74.0	74.0	0	107	121
WEST	0.0	0.0	0.0	0.0	0.0	0.0	0	0	0
EAST	71.0	71.0	71.0	16.0	16.0	16.0	179	179	179

INTERSECTION = 3 SCENARIO = 1 DATE/TIME: 5/18/98 4:14:14 PM

PROJECT: Philomath TSP
File: C:\SIGCAP2\SIGOPER2.SIG
CITY: Philomath
DESCRIPTION: 2015- Couplet Alt. 1a

ANALYST: BJD
PEAK HOUR: PM Peak
POPULATION: Fewer Than 20,000

INTERSECTION LOS = A
SATURATION = 37%

C= 90 G=84 Y= 6

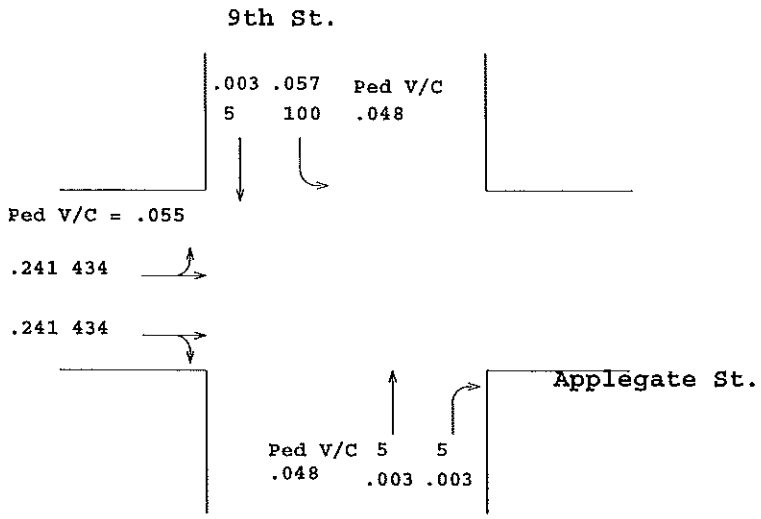

N-S V/C = .067
E-W V/C = .241
TOTAL AMBER = .067
MINIMUM V/C = .067

XXX = Adjusted Volumes .XXX = V/C

APPR	MOVMENT VOLUMES L	T	R	TOT	MOVE SATURATION L	T	R	MOVEMENT LOS L	T	R
SOUTH	0	5	5	10	0%	8%	8%	...	A	A
NORTH	100	5	0	105	37%	8%	0%	A	A	...
WEST	34	829	5	868	37%	37%	37%	A	A	A
EAST	0	0	0	0	0%	0%	0%	...	...	...

APPR	TRUCKS %	PED DIST	LANE WIDTH	PHASING
SOUTH	5.0%	48ft	12.ft	N-S -LEFT TURNS NOT PROTECTED
NORTH	5.0%	48ft	12.ft	
WEST	5.0%	40ft	12.ft	E-W -LEFT TURNS NOT PROTECTED
EAST	5.0%	40ft	12.ft	

LEG	LEG VOL AT LOS C
SOUTH	42
NORTH	306
WEST	1843
EAST	1983

APPR	TIME AVAIL(sec) L	T	R	RED TIME(sec) L	T	R	MOVE STORAGE(ft) L	T	R
SOUTH	0.0	18.2	18.2	0.0	68.8	68.8	0	5	5
NORTH	18.2	18.2	0.0	68.8	68.8	0.0	100	5	0
WEST	65.8	65.8	65.8	21.2	21.2	21.2	146	146	146
EAST	0.0	0.0	0.0	0.0	0.0	0.0	0	0	0

INTERSECTION = 4 SCENARIO = 1 DATE/TIME: 5/18/98 4:17:55 PM

PROJECT: Philomath TSP
File: C:\SIGCAP2\SIGOPER2.SIG
CITY: Philomath
DESCRIPTION: 2015- Couplet Alt. 1a

ANALYST: BJD
PEAK HOUR: PM Peak
POPULATION: Fewer Than 20,000

INTERSECTION LOS = B
SATURATION = 53%

C= 90 G=84 Y= 6

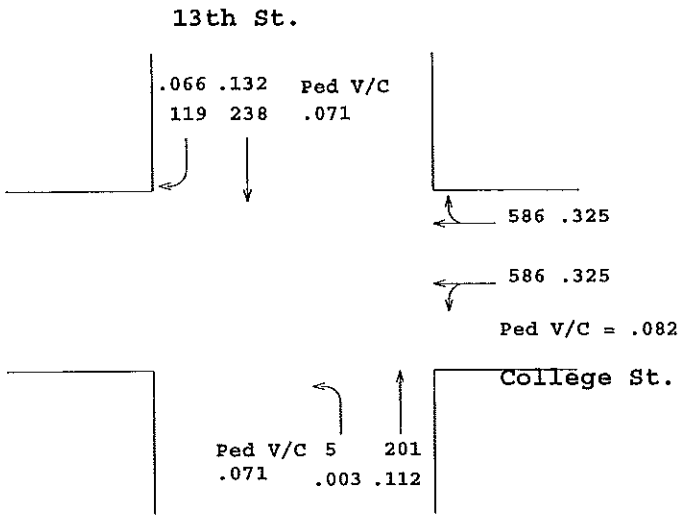

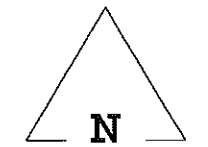

SIGCAP 2

N-S V/C = .135
E-W V/C = .325
TOTAL AMBER = .067
MINIMUM V/C = .067

XXX = Adjusted Volumes .XXX = V/C

APPR	MOVMENT VOLUMES L	T	R	TOT	MOVE SATURATION L	T	R	MOVEMENT LOS L	T	R
SOUTH	5	201	0	206	53%	45%	0%	B	A	...
NORTH	0	238	119	357	0%	52%	29%	...	B	A
WEST	0	0	0	0	0%	0%	0%	...	...	...
EAST	9	951	211	1171	53%	53%	53%	B	B	B

APPR	TRUCKS %	PED DIST	LANE WIDTH	PHASING
SOUTH	5.0%	48ft	12.ft	N-S -LEFT TURNS NOT PROTECTED
NORTH	5.0%	48ft	12.ft	
WEST	5.0%	40ft	12.ft	E-W -LEFT TURNS NOT PROTECTED
EAST	5.0%	40ft	12.ft	

LEG	LEG VOL AT LOS C
SOUTH	643
NORTH	1091
WEST	1526
EAST	1662

APPR	TIME AVAIL(sec) L	T	R	RED TIME(sec) L	T	R	MOVE STORAGE(ft) L	T	R
SOUTH	24.6	24.6	0.0	62.4	62.4	0.0	5	182	0
NORTH	0.0	24.6	24.6	0.0	62.4	62.4	0	216	108
WEST	0.0	0.0	0.0	0.0	0.0	0.0	0	0	0
EAST	59.4	59.4	59.4	27.6	27.6	27.6	249	249	249

INTERSECTION = 6 SCENARIO = 1 DATE/TIME: 5/18/98 4:28:58 PM

PROJECT: Philomath TSP
File: C:\SIGCAP2\SIGOPER2.SIG
CITY: Philomath
DESCRIPTION: 2015- Couplet Alt. 1a

ANALYST: BJD
PEAK HOUR: PM Peak
POPULATION: Fewer Than 20,000

INTERSECTION LOS = A
SATURATION = 48%

C= 90 G=84 Y= 6

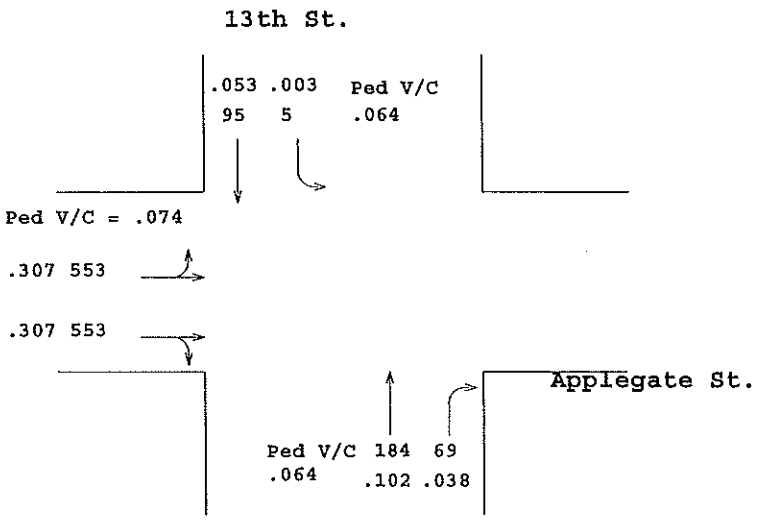

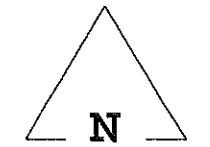

SIGCAP 2

N-S V/C = .105
E-W V/C = .307
TOTAL AMBER = .067
MINIMUM V/C = .067

XXX = Adjusted Volumes .XXX = V/C

APPR	MOVMENT VOLUMES L	T	R	TOT	MOVE SATURATION L	T	R	MOVEMENT LOS L	T	R
SOUTH	0	184	69	253	0%	47%	22%	...	A	A
NORTH	5	95	0	100	48%	27%	0%	A	A	...
WEST	112	934	60	1106	48%	48%	48%	A	A	A
EAST	0	0	0	0	0%	0%	0%	...	...	...

APPR	TRUCKS %	PED DIST	LANE WIDTH	PHASING
SOUTH	5.0%	48ft	12.ft	N-S -LEFT TURNS NOT PROTECTED
NORTH	5.0%	48ft	12.ft	
WEST	5.0%	40ft	12.ft	E-W -LEFT TURNS NOT PROTECTED
EAST	5.0%	40ft	12.ft	

LEG	LEG VOL AT LOS C
SOUTH	646
NORTH	627
WEST	1752
EAST	1597

APPR	TIME AVAIL(sec) L	T	R	RED TIME(sec) L	T	R	MOVE STORAGE(ft) L	T	R
SOUTH	0.0	21.4	21.4	0.0	65.6	65.6	0	175	66
NORTH	21.4	21.4	0.0	65.6	65.6	0.0	5	90	0
WEST	62.6	62.6	62.6	24.4	24.4	24.4	211	211	211
EAST	0.0	0.0	0.0	0.0	0.0	0.0	0	0	0

INTERSECTION = 7 SCENARIO = 1 DATE/TIME: 5/19/98 2:13:37 PM

PROJECT: Philomath TSP ANALYST: BJD

File: S:\TRANS\PROJECT\ODOT0254\WORKFILE\OPERATIO\SIGOPER2.SIG

CITY: Philomath PEAK HOUR: PM Peak Than 20,000

DESCRIPTION: 2015- Couplet Alt. 1a

INTERSECTION LOS = B

SATURATION = 52%

C= 90 G=84 Y= 6

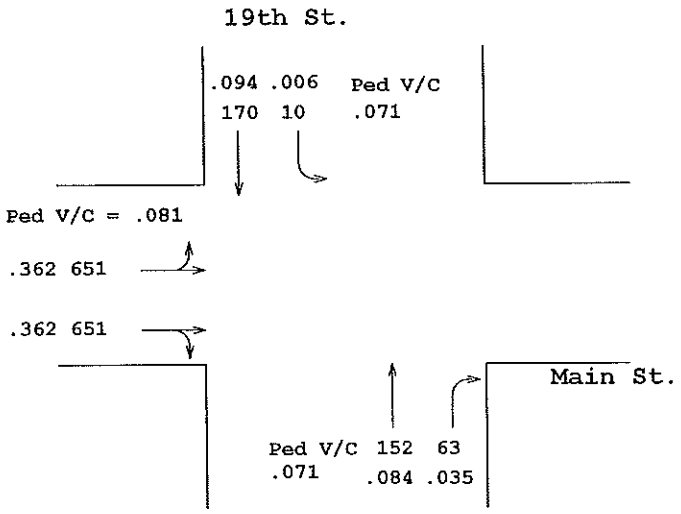

SIGCAP 2

N-S V/C = .094
E-W V/C = .362
TOTAL AMBER = .067
MINIMUM V/C = .067

XXX = Adjusted Volumes .XXX = V/C

APPR	MOVMENT VOLUMES L	T	R	TOT	MOVE SATURATION L	T	R	MOVEMENT LOS L	T	R
SOUTH	0	152	63	215	0%	47%	24%	...	A	A
NORTH	10	170	0	180	50%	52%	0%	B	B	...
WEST	505	684	113	1302	52%	52%	52%	B	B	B
EAST	0	0	0	0	0%	0%	0%	...	...	...

APPR	TRUCKS %	PED DIST	LANE WIDTH	PHASING
SOUTH	5.0%	48ft	12.ft	N-S -LEFT TURNS NOT PROTECTED
NORTH	5.0%	48ft	12.ft	
WEST	5.0%	40ft	12.ft	E-W -LEFT TURNS NOT PROTECTED
EAST	5.0%	40ft	12.ft	

LEG	LEG VOL AT LOS C
SOUTH	713
NORTH	1199
WEST	1865
EAST	1084

APPR	TIME AVAIL(sec) L	T	R	RED TIME(sec) L	T	R	MOVE STORAGE(ft) L	T	R
SOUTH	0.0	17.4	17.4	0.0	69.6	69.6	0	153	64
NORTH	17.4	17.4	0.0	69.6	69.6	0.0	10	171	0
WEST	66.6	66.6	66.6	20.4	20.4	20.4	212	212	212
EAST	0.0	0.0	0.0	0.0	0.0	0.0	0	0	0

INTERSECTION = 5 SCENARIO = 1 DATE/TIME: 5/26/98 12:19:17 PM

PROJECT: Philomath TSP ANALYST: BJD

File: S:\TRANS\PROJECT\ODOT0254\WORKFILE\OPERATIO\SIGOPER2.SIG

CITY: Philomath POPULATION: Greater than 20,000

DESCRIPTION: 2015- Couplet Alt. 1a

INTERSECTION LOS = D

SATURATION = 74%

C= 90 G=84 Y= 6

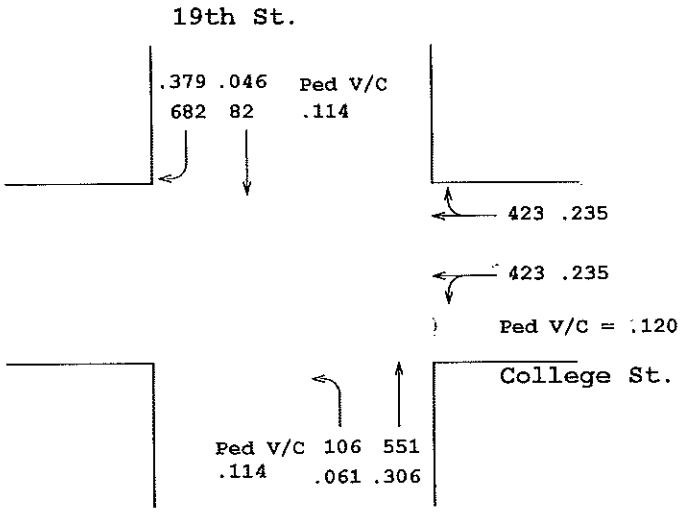

N

SIGCAP 2

N-S V/C = .440
E-W V/C = .235
TOTAL AMBER = .067
MINIMUM V/C = .067

XXX = Adjusted Volumes .XXX = V/C

APPR	MOVMENT VOLUMES L	T	R	TOT	MOVE SATURATION L	T	R	MOVEMENT LOS L	T	R
SOUTH	106	551	0	657	74%	54%	0%	D	B	...
NORTH	0	82	682	764	0%	14%	65%	...	A	C
WEST	0	0	0	0	0%	0%	0%	...	...	...
EAST	98	741	6	845	74%	74%	74%	D	D	D

APPR	TRUCKS %	PED DIST	LANE WIDTH	PHASING
SOUTH	5.0%	48ft	12.ft	N-S -LEFT TURNS NOT PROTECTED
NORTH	5.0%	48ft	12.ft	
WEST	5.0%	45ft	12.ft	E-W -LEFT TURNS NOT PROTECTED
EAST	5.0%	45ft	12.ft	

LEG	LEG VOL AT LOS C
SOUTH	811
NORTH	1279
WEST	1481
EAST	818

APPR	TIME AVAIL(sec) L	T	R	RED TIME(sec) L	T	R	MOVE STORAGE(ft) L	T	R
SOUTH	54.8	54.8	0.0	32.2	32.2	0.0	52	270	0
NORTH	0.0	54.8	54.8	0.0	32.2	32.2	0	40	334
WEST	0.0	0.0	0.0	0.0	0.0	0.0	0	0	0
EAST	29.2	29.2	29.2	57.8	57.8	57.8	357	357	357

INTERSECTION 1
SCENARIO 3
MAY 19, 1998

INTERSECTION = 1 SCENARIO = 3 DATE/TIME: 5/19/98 2:35:08 PM

PROJECT: Philomath TSP ANALYST: BJD

File: S:\TRANS\PROJECT\ODOT0254\WORKFILE\OPERATIO\SIGOPER2.SIG

CITY: Philomath PEAK HOUR: PM Peak Than 20,000

DESCRIPTION: 2015 Couplet Alt. 1b

INTERSECTION LOS = B

SATURATION = 55%

C= 90 G=84 Y= 6

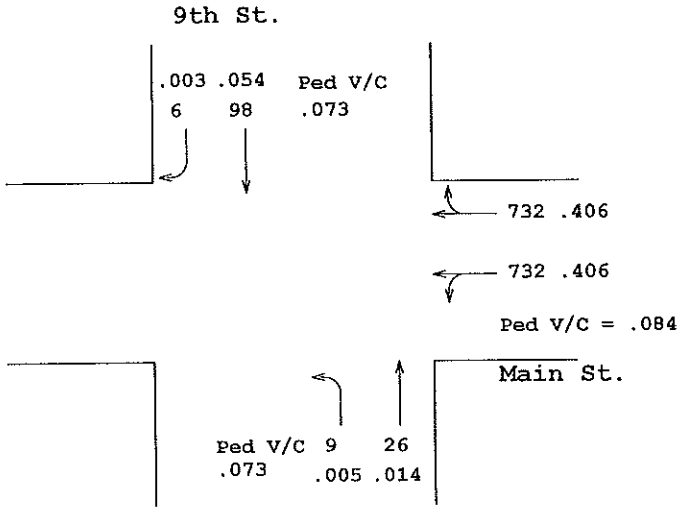

SIGCAP 2

N-S V/C = .073
E-W V/C = .406
TOTAL AMBER = .067
MINIMUM V/C = .067

XXX = Adjusted Volumes .XXX = V/C

APPR	MOVMENT VOLUMES L	T	R	TOT	MOVE SATURATION L	T	R	MOVEMENT LOS L	T	R
SOUTH	9	26	0	35	55%	16%	0%	B	A	...
NORTH	0	98	6	104	0%	42%	9%	...	A	A
WEST	0	0	0	0	0%	0%	0%	...	...	...
EAST	0	1384	79	1463	55%	55%	55%	...	B	B

APPR	TRUCKS %	PED DIST	LANE WIDTH	PHASING
SOUTH	5.0%	48ft	12.ft	N-S -LEFT TURNS NOT PROTECTED
NORTH	5.0%	48ft	12.ft	N-S - Right Turn Overlap
WEST	5.0%	40ft	12.ft	E-W -LEFT TURNS NOT PROTECTED
EAST	5.0%	40ft	12.ft	

LEG	LEG VOL AT LOS C
SOUTH	181
NORTH	285
WEST	1906
EAST	1993

APPR	TIME AVAIL(sec) L	T	R	RED TIME(sec) L	T	R	MOVE STORAGE(ft) L	T	R
SOUTH	12.8	12.8	0.0	74.2	74.2	0.0	10	28	0
NORTH	0.0	12.8	12.8	0.0	74.2	74.2	0	105	6
WEST	0.0	0.0	0.0	0.0	0.0	0.0	0	0	0
EAST	71.2	71.2	71.2	0.0	15.8	15.8	191	191	191

INTERSECTION = 3 SCENARIO = 2 DATE/TIME: 5/19/98 2:46:24 PM

PROJECT: Philomath TSP ANALYST: BJD

File: S:\TRANS\PROJECT\ODOT0254\WORKFILE\OPERATIO\SIGOPER2.SIG

CITY: Philomath POPULATION: Greater than 20,000

DESCRIPTION: 2015- Couplet Alt. 1b

INTERSECTION LOS = A

SATURATION = 37%

C= 90 G=84 Y= 6

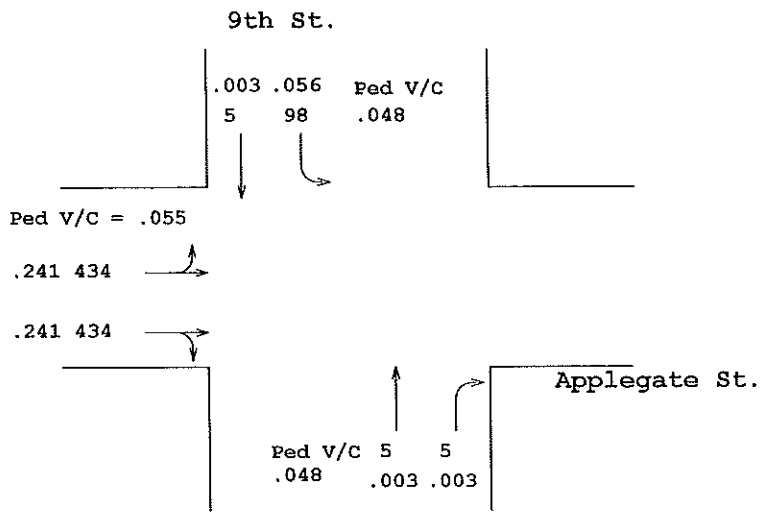

SIGCAP 2

N-S V/C = .067
E-W V/C = .241
TOTAL AMBER = .067
MINIMUM V/C = .067

XXX = Adjusted Volumes .XXX = V/C

APPR	MOVMENT VOLUMES L	T	R	TOT	MOVE SATURATION L	T	R	MOVEMENT LOS L	T	R
SOUTH	0	5	5	10	0%	8%	8%	...	A	A
NORTH	98	5	0	103	37%	8%	0%	A	A	...
WEST	34	829	5	868	37%	37%	37%	A	A	A
EAST	0	0	0	0	0%	0%	0%	...	...	...

APPR	TRUCKS %	PED DIST	LANE WIDTH	PHASING
SOUTH	5.0%	48ft	12.ft	N-S -LEFT TURNS NOT PROTECTED
NORTH	5.0%	48ft	12.ft	
WEST	5.0%	40ft	12.ft	E-W -LEFT TURNS NOT PROTECTED
EAST	5.0%	40ft	12.ft	

LEG	LEG VOL AT LOS C
SOUTH	42
NORTH	301
WEST	1843
EAST	1978

APPR	TIME AVAIL(sec) L	T	R	RED TIME(sec) L	T	R	MOVE STORAGE(ft) L	T	R
SOUTH	0.0	18.2	18.2	0.0	68.8	68.8	0	5	5
NORTH	18.2	18.2	0.0	68.8	68.8	0.0	98	5	0
WEST	65.8	65.8	65.8	21.2	21.2	21.2	146	146	146
EAST	0.0	0.0	0.0	0.0	0.0	0.0	0	0	0

INTERSECTION = 4 SCENARIO = 2 DATE/TIME: 5/19/98 2:39:50 PM

PROJECT: Philomath TSP ANALYST: BJD

File: S:\TRANS\PROJECT\ODOT0254\WORKFILE\OPERATIO\SIGOPER2.SIG

CITY: Philomath PEAK HOUR: PM Peak

DESCRIPTION: 2015- Couplet Alt. 1b

INTERSECTION LOS = B

SATURATION = 59%

C= 90 G=84 Y= 6

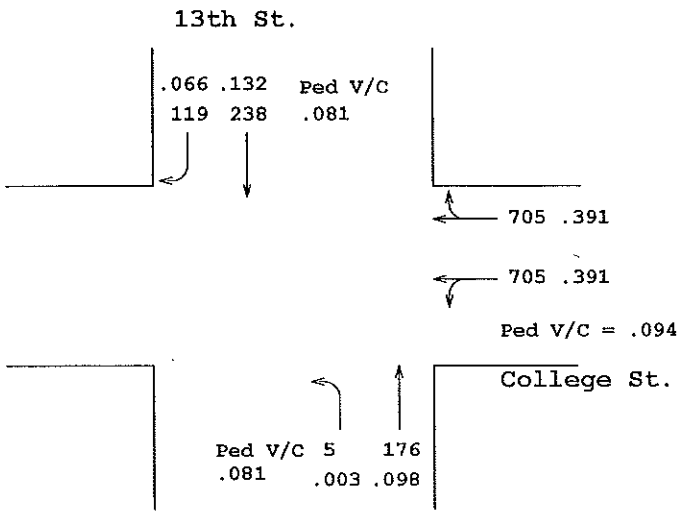

SIGCAP 2

N-S V/C = .135
E-W V/C = .391
TOTAL AMBER = .067
MINIMUM V/C = .067

XXX = Adjusted Volumes .XXX = V/C

APPR	MOVMENT VOLUMES L	T	R	TOT	MOVE SATURATION L	T	R	MOVEMENT LOS L	T	R
SOUTH	5	176	0	181	59%	45%	0%	B	A	...
NORTH	0	238	119	357	0%	58%	32%	...	B	A
WEST	0	0	0	0	0%	0%	0%	...	...	...
EAST	4	1161	244	1409	59%	59%	59%	B	B	B

APPR	TRUCKS %	PED DIST	LANE WIDTH	PHASING
SOUTH	5.0%	48ft	12.ft	N-S -LEFT TURNS NOT PROTECTED
NORTH	5.0%	48ft	12.ft	
WEST	5.0%	40ft	12.ft	E-W -LEFT TURNS NOT PROTECTED
EAST	5.0%	40ft	12.ft	

LEG	LEG VOL AT LOS C
SOUTH	525
NORTH	964
WEST	1595
EAST	1748

APPR	TIME AVAIL(sec) L	T	R	RED TIME(sec) L	T	R	MOVE STORAGE(ft) L	T	R
SOUTH	21.6	21.6	0.0	65.4	65.4	0.0	5	167	0
NORTH	0.0	21.6	21.6	0.0	65.4	65.4	0	226	113
WEST	0.0	0.0	0.0	0.0	0.0	0.0	0	0	0
EAST	62.4	62.4	62.4	24.6	24.6	24.6	270	270	270

INTERSECTION = 6 SCENARIO = 2 DATE/TIME: 5/22/98 3:49:46 PM

PROJECT: Philomath TSP ANALYST: BJD

File: S:\TRANS\PROJECT\ODOT0254\WORKFILE\OPERATIO\SIGOPER2.SIG

CITY: Philomath POPULATION: Fewer Than 20,000

DESCRIPTION: 2015- Couplet Alt. 1b

INTERSECTION LOS = A

SATURATION = 44%

C= 90 G=84 Y= 6

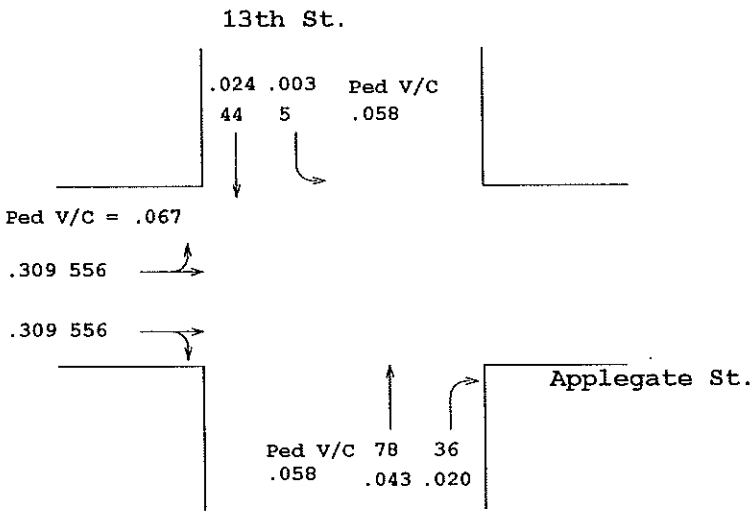

SIGCAP 2

N-S V/C = .067
E-W V/C = .309
TOTAL AMBER = .067
MINIMUM V/C = .067

XXX = Adjusted Volumes .XXX = V/C

APPR	MOVMENT VOLUMES L	T	R	TOT	MOVE SATURATION L	T	R	MOVEMENT LOS L	T	R
SOUTH	0	78	36	114	0%	31%	18%	...	A	A
NORTH	5	44	0	49	41%	20%	0%	A	A	...
WEST	112	968	32	1112	44%	44%	44%	A	A	A
EAST	0	0	0	0	0%	0%	0%	...	...	...

APPR	TRUCKS %	PED DIST	LANE WIDTH	PHASING
SOUTH	5.0%	48ft	12.ft	N-S -LEFT TURNS NOT PROTECTED
NORTH	5.0%	48ft	12.ft	
WEST	5.0%	40ft	12.ft	E-W -LEFT TURNS NOT PROTECTED
EAST	5.0%	40ft	12.ft	

LEG	LEG VOL AT LOS C
SOUTH	331
NORTH	416
WEST	1934
EAST	1755

APPR	TIME AVAIL(sec) L	T	R	RED TIME(sec) L	T	R	MOVE STORAGE(ft) L	T	R
SOUTH	0.0	14.9	14.9	0.0	72.1	72.1	0	81	38
NORTH	14.9	14.9	0.0	72.1	72.1	0.0	5	46	0
WEST	69.1	69.1	69.1	17.9	17.9	17.9	161	161	161
EAST	0.0	0.0	0.0	0.0	0.0	0.0	0	0	0

INTERSECTION = 5 SCENARIO = 2 DATE/TIME: 5/29/98 9:53:17 AM

PROJECT: Philomath TSP ANALYST: BJD

File: S:\TRANS\PROJECT\ODOT0254\WORKFILE\OPERATIO\SIGOPER2.SIG

CITY: Philomath PEAK HOUR: PM Peak Than 20,000

DESCRIPTION: 2015- Couplet Alt. 1b

INTERSECTION LOS = D

SATURATION = 83%

C= 60 G=54 Y= 6

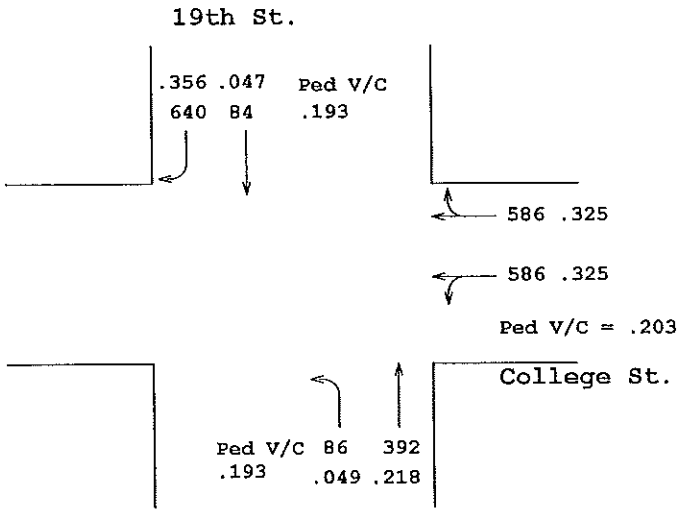

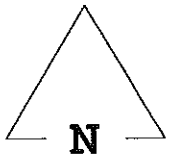

SIGCAP 2

N-S V/C = .405
E-W V/C = .325
TOTAL AMBER = .100
MINIMUM V/C = .100

XXX = Adjusted Volumes .XXX = V/C

APPR	MOVMENT VOLUMES L	T	R	TOT	MOVE SATURATION L	T	R	MOVEMENT LOS L	T	R
SOUTH	86	392	0	478	83%	49%	0%	D	B	...
NORTH	0	84	640	724	0%	18%	74%	...	A	D
WEST	0	0	0	0	0%	0%	0%	...	...	...
EAST	98	1065	8	1171	83%	83%	83%	D	D	D

APPR	TRUCKS %	PED DIST	LANE WIDTH	PHASING
SOUTH	5.0%	48ft	12.ft	N-S -LEFT TURNS NOT PROTECTED
NORTH	5.0%	48ft	12.ft	
WEST	5.0%	45ft	12.ft	E-W -LEFT TURNS NOT PROTECTED
EAST	5.0%	45ft	12.ft	

LEG	LEG VOL AT LOS C
SOUTH	560
NORTH	954
WEST	1521
EAST	994

APPR	TIME AVAIL(sec) L	T	R	RED TIME(sec) L	T	R	MOVE STORAGE(ft) L	T	R
SOUTH	29.9	29.9	0.0	27.1	27.1	0.0	36	164	0
NORTH	0.0	29.9	29.9	0.0	27.1	27.1	0	35	267
WEST	0.0	0.0	0.0	0.0	0.0	0.0	0	0	0
EAST	24.1	24.1	24.1	32.9	32.9	32.9	292	292	292

UNSIGNALIZED - T - INTERSECTION CAPACITY CALCULATION FORM

5/27/1998 13:10:42

FILE NAME: h2034xtn

CITY: Philomath
ANALYST: BJD
INTERSECTION: Hwy. 20 at Hwy. 34 North
ALTERNATE: 2015- Ext. Couplet N
METRO SIZE: LESS THAN 20,000
COUNT: PM Peak
TYPE OF CONTROL: STOP
LOCATION PLAN:

APPROACH CODES ARE

LANE	1	2	3	4
A	0			
B	2	2	3	
C	3			

A — GRADE= .0%

B — GRADE= .0%

C — GRADE= .0%

SPEED: 40 MPH
RESTRICTED SIGHT CODE IS 1
MINOR STREET ADJUSTMENTS -
ACCELERATION LANE? NO
CURB RADIUS OR TURN ANGLE? NO

APPROACH	A		B		C	
MOVE	AT	AR	BL	BT	CL	CR
VOLUME	0	0	368	699	10	0
PCH			405		11	0
LANES	0		3		1	

STEP 1 RIGHT TURN FROM C — CR

CONFLICTING FLOWS = MH =	0.	VPH
CRITICAL GAP = TG =	6.0	SECS
POTENTIAL CAPACITY = M1 =	1012.	PCH

SHARED LANE - SEE STEP 3

NO SHARED LANE DEMAND =	0	PCH
AVAILABLE RESERVE =	1012.	PCH
DELAY & LOS =	A	

STEP 2 LEFT TURN FROM B — BL

CONFLICTING FLOWS = MH =	0.	VPH
CRITICAL GAP = TG =	5.5	SECS
POTENTIAL CAPACITY = M2 =	1105.	PCH
DEMAND = BL =	405	PCH
CAPACITY USED =	36.65	%
IMPEDANCE FACTOR = P2 =	.714	
AVAILABLE RESERVE =	700.	PCH
DELAY & LOS =	A	

STEP 3 LEFT TURN FROM C — CL

CONFLICTING FLOWS = MH =	1067.	VPH
CRITICAL GAP = TG =	6.5	SECS
POTENTIAL CAPACITY = M3 =	200.	PCH
ADJUSTING FOR IMPEDANCE = M3 =	143.	PCH

STEP 3 CONTINUED

	CL	
NO SHARED LANE DEMAND =	0	PCH
AVAILABLE RESERVE =	0.	PCH
DELAY & LOS =	N/A	
SHARED LANE DEMAND =	11	PCH
POTENTIAL CAPACITY = M13 =	141.	PCH
AVAILABLE RESERVE =	130.	PCH
DELAY & LOS =	D	

LOS C VOLUMES:	LEG C
VEHICLES PER HOUR	281.

VER 03/93

UNSIGNALIZED – INTERSECTION CAPACITY CALCULATION FORM
4-WAY INTERSECTION

UNSIGNALIZED INTERSECTION CAPACITY CALCULATION FORM
4-WAY INTERSECTION 5/27/1998 13:20:23

FILE NAME: h2034xts

CITY: Philomath
INTERSECTION: Hwy 20 at Hwy 34 (South)
ALTERNATE: 2015-Ext. Couplet So
COUNT: PM Peak
LOCATION PLAN:

ANALYST: BJD
METRO SIZE: LESS THAN 20,000
TYPE OF CONTROL: STOP

APPROACH CODES ARE

LANE	1	2	3	4
A	1	2	2	
B	0			
C	1	2		
D	2	3		

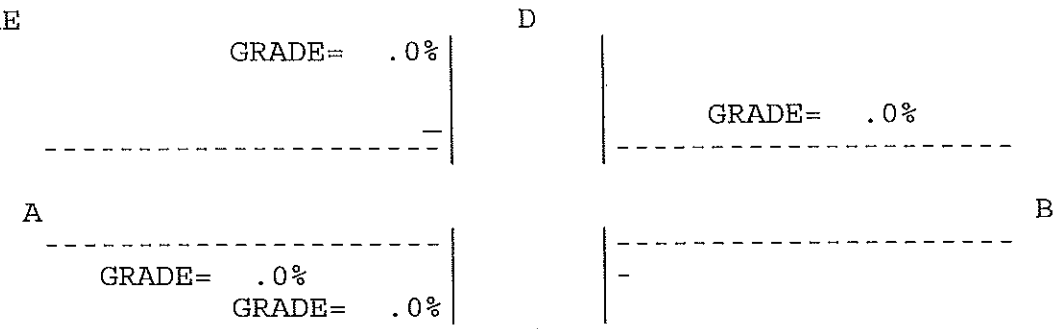

SPEED: 40 MPH
RESTRICTED SIGHT CODE IS 1
MINOR STREET ADJUSTMENTS -
ACCELERATION LANE? NO
CURB RADIUS OR TURN ANGLE? NO

APPR	A			B			C			D		
MOVE	AL	AT	AR	BL	BT	BR	CL	CT	CR	DL	DT	DR
VOL	5	512	9	0	0	0	0	10	219	5	300	0
PCH	6			0			0	11	241	6	330	0
LANES		3			0			2			2	

STEP 1	RIGHT TURN FROM C/D	CR	DR	
	CONFLICTING FLOWS = MH =	256.	0.	VPH
	CRITICAL GAP = TG =	6.0	6.0	SECS
	POTENTIAL CAPACITY = M1 =	739.	1012.	PCH
	DEMAND =	241	0	PCH
	CAPACITY USED =	32.606	.000	%
	IMPEDANCE FACTOR =	.750	1.001	
	SHARED LANE - SEE STEP 3			
	NO SHARED LANE - RESERVE =	498.	0.	PCH
	DELAY & LOS =	A	N/A	

STEP 2 -	LEFT TURNS FROM B/A	BL	AL	
	CONFLICTING FLOWS = MH =	0.	0.	VPH
	CRITICAL GAP = TG =	5.5	5.5	SECS
	POTENTIAL CAPACITY = M2 =	601.	1105.	PCH
	DEMAND =	0	6	PCH
	CAPACITY USED =	.00	.54	%
	IMPEDANCE FACTOR =	1.001	.997	
	AVAILABLE RESERVE =	0.	1099.	PCH
	DELAY & LOS =	N/A	A	

STEP 3	THRU MOVEMENT FROM C/D	CT	DT
	CONFLICTING FLOWS = MT =	517.	526. VPH
	CRITICAL GAP = TG =	7.0	7.0 SECS
	POTENTIAL CAPACITY = MN3 =	416.	410. PCH
	IMPEDANCE ADJUSTMENT = M3 =	415.	409. PCH
	DEMAND =	11	330 PCH
	CAPACITY USED =	2.65	80.50 %
	IMPEDANCE FACTOR = P3 =	.983	.260
	NO SHARED LANE		
	AVAILABLE RESERVE=	404.	79. PCH
	DELAY & LOS =	A	E
	SHARED LANE WITH LEFT TURN - SEE	STEP 4	
	SHARED LANE DEMAND =	0	0 PCH
	POTENTIAL CAPACITY = M13 =	0.	0. PCH
	AVAILABLE RESERVE =	0.	0. PCH
	DELAY & LOS =	N/A	N/A

STEP 4 -	LEFT TURN FROM C/D	CL	DL
	CONFLICTING FLOWS = MH =	817.	755. VPH
	CRITICAL GAP = TG =	6.5	6.5 SECS
	POTENTIAL CAPACITY = MN =	300.	330. PCH
	ADJUST FOR IMPEDANCE:	78.	243. PCH
	NO SHARED LANE DEMAND =	0	6 PCH
	AVAILABLE RESERVE =	0.	237. PCH
	DELAY & LOS =	N/A	C
	WITH LEFT & THRU		
	SHARED LANE DEMAND =	0	0 PCH
	CAPACITY OF SHARED LANE =	0.	0. PCH
	AVAILABLE RESERVE =	0.	0. PCH
	DELAY & LOS =	N/A	N/A
	WITH LEFT, THRU, & RIGHT		
	SHARED LANE DEMAND =	0	0 PCH
	CAPACITY OF SHARED LANE =	0.	0. PCH
	AVAILABLE RESERVE =	0.	0. PCH
	DELAY & LOS =	N/A	N/A

LOS C VOLUMES:	FOR LEG C	FOR LEG D
VEHICLES PER HOUR	579.	444.

VER 03/93

INTERSECTION 8
SCENARIO 2
JUNE 1, 1998

INTERSECTION = 8 SCENARIO = 2 DATE/TIME: 6/1/98 2:09:19 PM

PROJECT: Philomath TSP ANALYST: BJD

File: S:\TRANS\PROJECT\ODOT0254\WORKFILE\OPERATIO\SIGOPER2.SIG

CITY: Philomath PEAK HOUR: PM Peak

DESCRIPTION: 2015 -Widen Main to Five Lanes

INTERSECTION LOS = C

SATURATION = 67%

C= 90 G=78 Y= 12

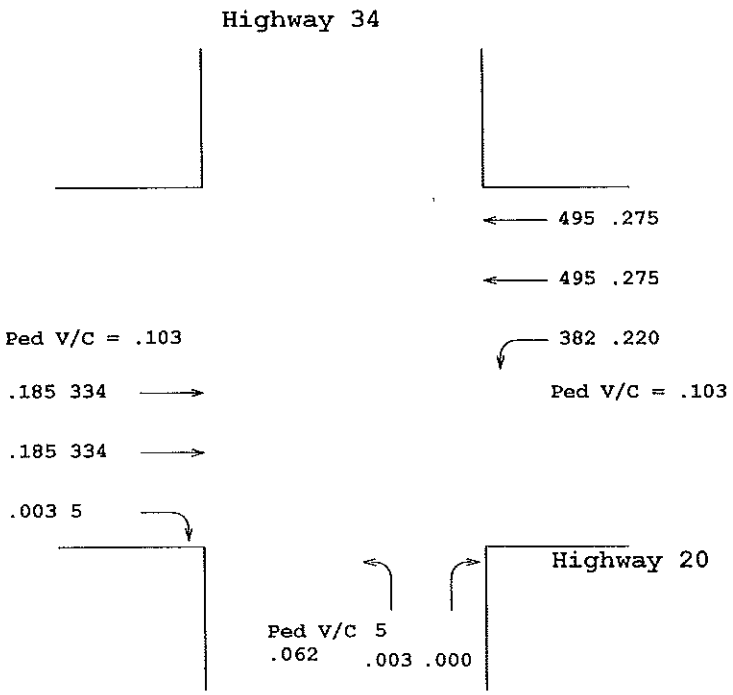

SIGCAP 2

N-S V/C = .133
E-W V/C = .405
TOTAL AMBER = .133
MINIMUM V/C = .067

XXX = Adjusted Volumes .XXX = V/C

APPR	MOVMENT VOLUMES L	T	R	TOT	MOVE SATURATION L	T	R	MOVEMENT LOS L	T	R
SOUTH	5	0	196	201	16%	0%	0%	A	...	A
NORTH	0	0	0	0	0%	0%	0%	...	...	...
WEST	0	667	5	672	0%	67%	14%	...	C	A
EAST	382	990	0	1372	67%	50%	0%	C	B	...

APPR	TRUCKS %	PED DIST	LANE WIDTH	PHASING
SOUTH	5.0%	48ft	12.ft	N-S -LEFT TURNS PROTECTED NO OVERLAP
NORTH	5.0%	48ft	12.ft	N-S - Right Turn Overlap
WEST	5.0%	24ft	12.ft	E-W -LEFT TURNS PROTECTED WITH OVERLAP
EAST	5.0%	24ft	12.ft	

LEG	LEG VOL AT LOS C
SOUTH	641
NORTH	0
WEST	1817
EAST	2436

APPR	TIME AVAIL(sec) L	T	R	RED TIME(sec) L	T	R	MOVE STORAGE(ft) L	T	R
SOUTH	9.7	0.0	31.8	77.3	0.0	55.2	6	0	158
NORTH	0.0	0.0	0.0	0.0	0.0	0.0	0	0	0
WEST	0.0	26.9	26.9	0.0	60.1	60.1	0	292	4
EAST	31.8	58.7	0.0	55.2	28.3	0.0	309	215	0

INTERSECTION = 7 SCENARIO = 4 DATE/TIME: 6/1/98 2:27:30 PM

PROJECT: Philomath TSP ANALYST: BJD

File: S:\TRANS\PROJECT\ODOT0254\WORKFILE\OPERATIO\SIGOPER2.SIG

CITY: Philomath PEAK HOUR: PM Peak

DESCRIPTION: 2015 -Widen Main to Five Lanes

INTERSECTION LOS = C

SATURATION = 63%

C= 90 G=81 Y= 9

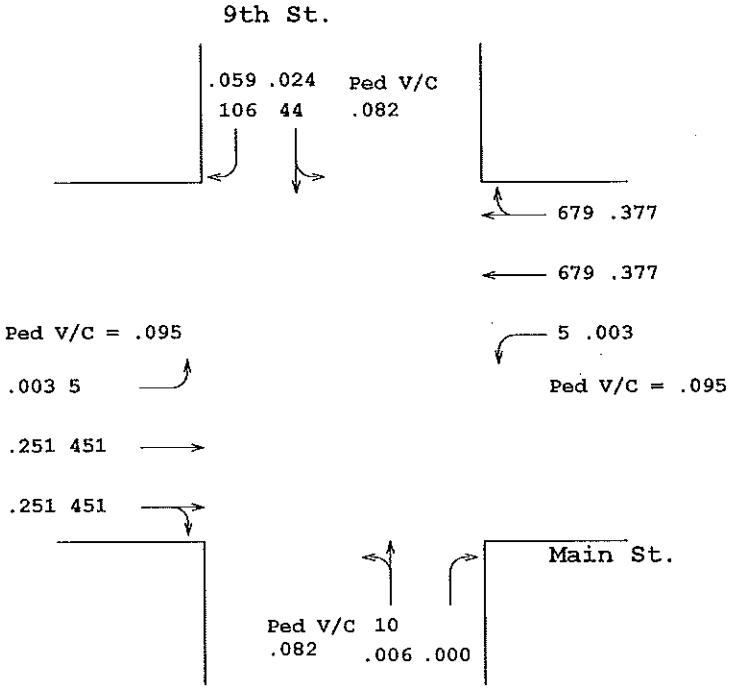

SIGCAP 2

N-S V/C = .082
E-W V/C = .444
TOTAL AMBER = .100
MINIMUM V/C = .067

XXX = Adjusted Volumes .XXX = V/C

APPR	MOVMENT VOLUMES L	T	R	TOT	MOVE SATURATION L	T	R	MOVEMENT LOS L	T	R
SOUTH	5	5	5	15	63%	63%	0%	C	C	A
NORTH	39	5	111	155	63%	63%	31%	C	C	A
WEST	5	897	5	907	12%	45%	45%	A	A	A
EAST	5	1281	77	1363	12%	63%	63%	A	C	C

APPR	TRUCKS %	PED DIST	LANE WIDTH	PHASING
SOUTH	5.0%	48ft	12.ft	N-S -LEFT TURNS NOT PROTECTED
NORTH	5.0%	48ft	12.ft	N-S - Right Turn Overlap
WEST	5.0%	40ft	12.ft	E-W -LEFT TURNS PROTECTED WITH OVERLAP
EAST	5.0%	40ft	12.ft	

LEG	LEG VOL AT LOS C
SOUTH	35
NORTH	285
WEST	2717
EAST	2717

APPR	TIME AVAIL(sec) L	T	R	RED TIME(sec) L	T	R	MOVE STORAGE(ft) L	T	R
SOUTH	12.6	12.6	22.9	74.4	74.4	64.1	11	11	5
NORTH	12.6	12.6	22.9	74.4	74.4	64.1	47	47	103
WEST	10.3	58.1	58.1	76.7	28.9	28.9	6	200	200
EAST	10.3	58.1	58.1	76.7	28.9	28.9	6	301	301

INTERSECTION = 9 SCENARIO = 1 DATE/TIME: 6/1/98 2:22:51 PM

PROJECT: Philomath TSP ANALYST: BJD

File: S:\TRANS\PROJECT\ODOT0254\WORKFILE\OPERATIO\SIGOPER2.SIG

CITY: Philomath PEAK HOUR: PM Peak

DESCRIPTION: 2015 - Widen Main to Five Lanes

INTERSECTION LOS = C-D

SATURATION = 72%

C= 90 G=81 Y= 9

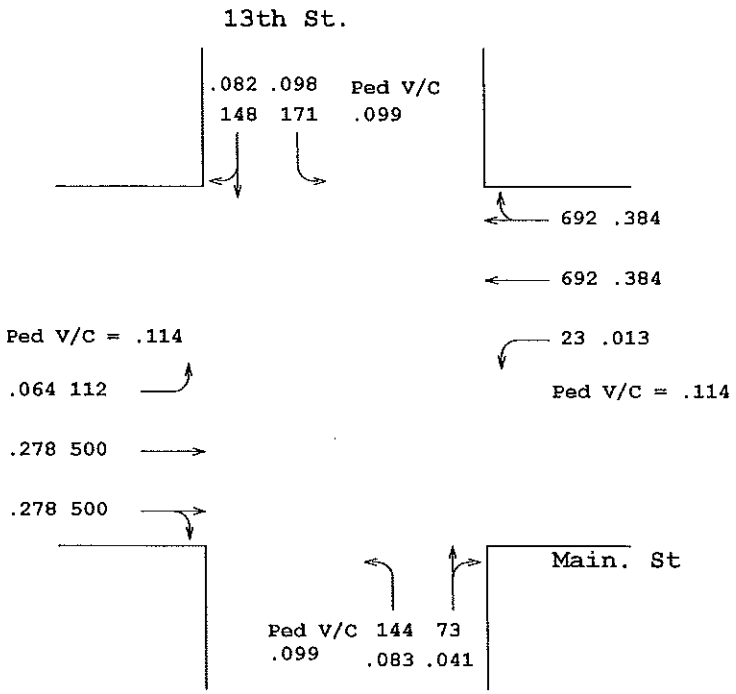

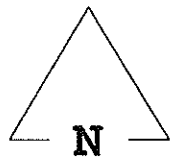

SIGCAP 2

N-S V/C = .165
E-W V/C = .451
TOTAL AMBER = .100
MINIMUM V/C = .067

XXX = Adjusted Volumes .XXX = V/C

APPR	MOVMENT VOLUMES L	T	R	TOT	MOVE SATURATION L	T	R	MOVEMENT LOS L	T	R
SOUTH	144	50	23	217	72%	25%	25%	C-D	A	A
NORTH	171	29	119	319	72%	41%	41%	C-D	A	A
WEST	112	940	60	1112	69%	55%	55%	C	B	B
EAST	23	1245	138	1406	22%	72%	72%	A	C-D	C-D

APPR	TRUCKS %	PED DIST	LANE WIDTH	PHASING
SOUTH	5.0%	48ft	12.ft	N-S -LEFT TURNS NOT PROTECTED
NORTH	5.0%	48ft	12.ft	
WEST	5.0%	40ft	12.ft	E-W -LEFT TURNS PROTECTED WITH OVERLAP
EAST	5.0%	40ft	12.ft	

LEG	LEG VOL AT LOS C
SOUTH	331
NORTH	623
WEST	2638
EAST	2557

APPR	TIME AVAIL(sec) L	T	R	RED TIME(sec) L	T	R	MOVE STORAGE(ft) L	T	R
SOUTH	21.7	21.7	21.7	65.3	65.3	65.3	137	69	69
NORTH	21.7	21.7	21.7	65.3	65.3	65.3	162	140	140
WEST	8.8	50.5	50.5	78.2	36.5	36.5	126	274	274
EAST	8.8	50.5	50.5	78.2	36.5	36.5	26	379	379

INTERSECTION = 7 SCENARIO = 3 DATE/TIME: 6/1/98 2:25:08 PM

PROJECT: Philomath TSP ANALYST: BJD

File: S:\TRANS\PROJECT\ODOT0254\WORKFILE\OPERATIO\SIGOPER2.SIG

CITY: Philomath POPULATION: Greater than 20,000

DESCRIPTION: 2015 - Widen Main to Five Lanes

INTERSECTION LOS = D

SATURATION = 77%

C= 90 G=81 Y= 9

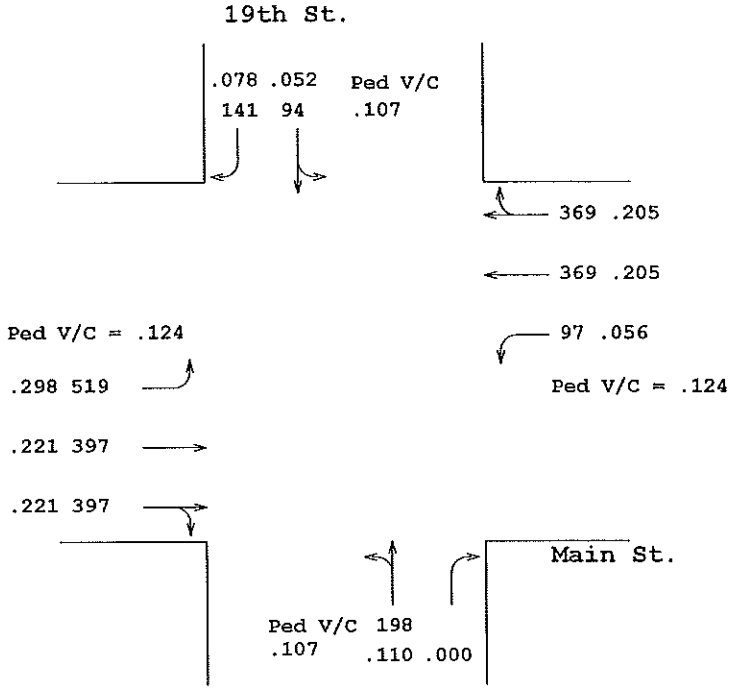

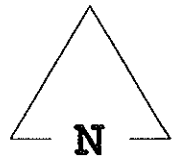

SIGCAP 2

N-S V/C = .165
E-W V/C = .503
TOTAL AMBER = .100
MINIMUM V/C = .067

XXX = Adjusted Volumes .XXX = V/C

APPR	MOVMENT VOLUMES L	T	R	TOT	MOVE SATURATION L	T	R	MOVEMENT LOS L	T	R
SOUTH	151	47	63	261	77%	77%	0%	D	D	A
NORTH	10	84	678	772	77%	77%	21%	D	D	A
WEST	519	676	118	1313	77%	44%	44%	D	A	A
EAST	97	734	4	835	66%	77%	77%	C	D	D

APPR	TRUCKS %	PED DIST	LANE WIDTH	PHASING
SOUTH	5.0%	48ft	12.ft	N-S -LEFT TURNS NOT PROTECTED
NORTH	5.0%	48ft	12.ft	N-S - Right Turn Overlap
WEST	5.0%	40ft	12.ft	E-W -LEFT TURNS PROTECTED WITH OVERLAP
EAST	5.0%	40ft	12.ft	

LEG	LEG VOL AT LOS C
SOUTH	519
NORTH	1245
WEST	2668
EAST	1469

APPR	TIME AVAIL(sec) L	T	R	RED TIME(sec) L	T	R	MOVE STORAGE(ft) L	T	R
SOUTH	20.0	20.0	28.1	67.0	67.0	58.9	192	192	54
NORTH	20.0	20.0	56.2	67.0	67.0	30.8	91	91	319
WEST	36.1	52.9	52.9	50.9	34.1	34.1	388	205	205
EAST	8.1	24.8	24.8	78.9	62.2	62.2	110	334	334

UNSIGNALIZED INTERSECTION CAPACITY CALCULATION FORM
4-WAY INTERSECTION 6/ 3/1998 14:13:52

FILE NAME: MAIN9WH

CITY: PHILOMATH
ANALYST: TNT
INTERSECTION: MAIN STREET AT 9TH STREET
ALTERNATE: 2015 WEST HILLS RD.
METRO SIZE: LESS THAN 20,000
COUNT: PM
TYPE OF CONTROL: STOP
LOCATION PLAN:

APPROACH CODES ARE

LANE	1	2	3	4
A	4	3		
B	4	3		
C	5			
D	5			

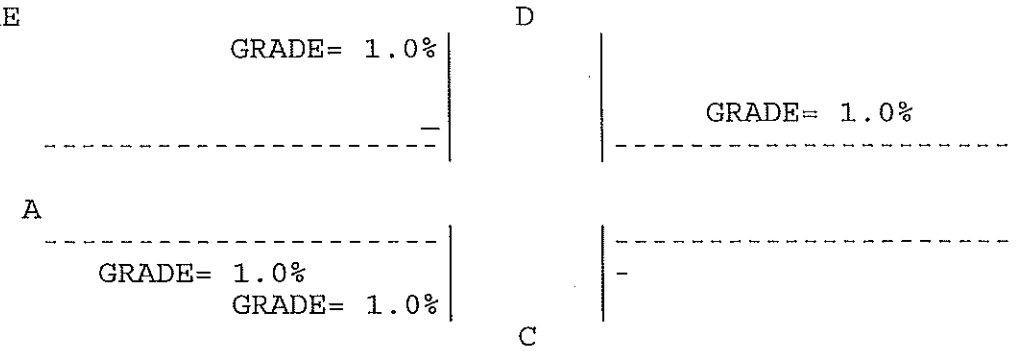

SPEED: 25 MPH
RESTRICTED SIGHT CODE IS 1
MINOR STREET ADJUSTMENTS -
ACCELERATION LANE? NO
CURB RADIUS OR TURN ANGLE? NO

APPR	A			B			C			D		
MOVE	AL	AT	AR	BL	BT	BR	CL	CT	CR	DL	DT	DR
VOL	17	459	5	5	646	107	5	5	5	125	5	38
PCH	24			7			7	7	7	175	7	53
LANES		2			2			1			1	

STEP 1 RIGHT TURN FROM C/D

	CR	DR	
CONFLICTING FLOWS = MH =	462.	700.	VPH
CRITICAL GAP = TG =	5.5	5.5	SECS
POTENTIAL CAPACITY = M1 =	646.	483.	PCH
DEMAND =	7	53	PCH
CAPACITY USED =	1.083	10.981	%
IMPEDANCE FACTOR =	.993	.924	

SHARED LANE - SEE STEP 3

NO SHARED LANE - RESERVE =	0.	0.	PCH
DELAY & LOS =	N/A	N/A	

STEP 2 - LEFT TURNS FROM B/A

	BL	AL	
CONFLICTING FLOWS = MH =	464.	753.	VPH
CRITICAL GAP = TG =	5.0	5.0	SECS
POTENTIAL CAPACITY = M2 =	740.	534.	PCH
DEMAND =	7	24	PCH
CAPACITY USED =	.95	4.49	%
IMPEDANCE FACTOR =	.994	.970	
AVAILABLE RESERVE =	733.	510.	PCH
DELAY & LOS =	A	A	

INTERSECTION = 1 SCENARIO = 1 DATE/TIME: 6/3/98 10:35:27 AM

PROJECT: Philomath TSP
File: C:\SIGCAP2\SIGOPER4.sig
CITY: Philomath
DESCRIPTION: 2015- West Hills Rd. Ext.

ANALYST: BJD
PEAK HOUR: PM Peak
POPULATION: Fewer Than 20,000

INTERSECTION LOS = D-E
SATURATION = 87%

C= 90 G=81 Y= 9

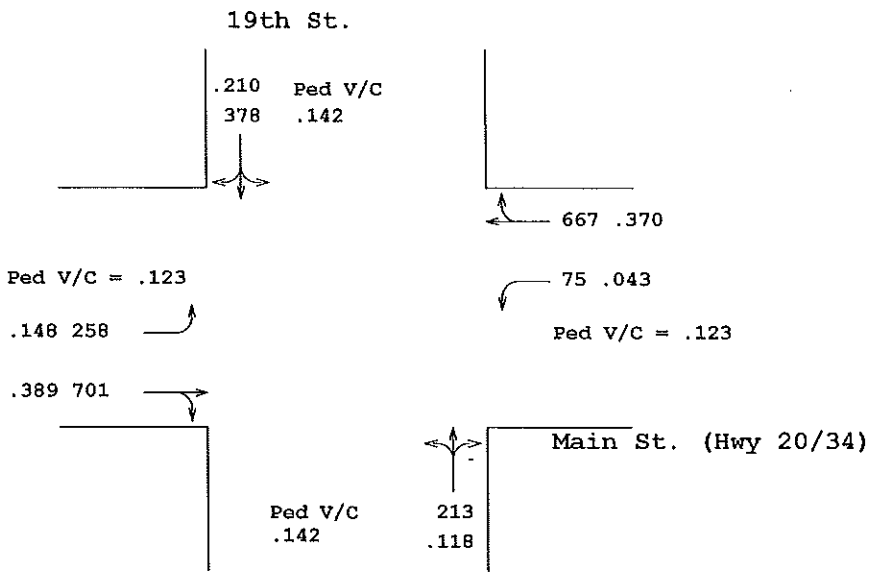

N-S V/C = .249
E-W V/C = .519
TOTAL AMBER = .100
MINIMUM V/C = .067

XXX = Adjusted Volumes .XXX = V/C

APPR	MOVMENT VOLUMES L	T	R	TOT	MOVE SATURATION L	T	R	MOVEMENT LOS L	T	R
SOUTH	68	73	72	213	87%	87%	47%	D-E	D-E	A
NORTH	15	120	228	363	87%	87%	75%	D-E	D-E	D
WEST	237	547	96	880	87%	76%	76%	D-E	D	D
EAST	70	617	6	693	60%	87%	87%	C	D-E	D-E

APPR	TRUCKS %	PED DIST	LANE WIDTH	PHASING
SOUTH	5.0%	22ft	12.ft	N-S -LEFT TURNS NOT PROTECTED
NORTH	9.0%	40ft	12.ft	
WEST	14.0%	48ft	12.ft	E-W -LEFT TURNS PROTECTED WITH OVERLAP
EAST	12.0%	48ft	12.ft	

LEG	LEG VOL AT LOS C
SOUTH	403
NORTH	548
WEST	1448
EAST	1072

APPR	TIME AVAIL(sec) L	T	R	RED TIME(sec) L	T	R	MOVE STORAGE(ft) L	T	R
SOUTH	26.3	26.3	26.3	60.7	60.7	60.7	189	189	189
NORTH	26.3	26.3	26.3	60.7	60.7	60.7	334	334	334
WEST	15.7	47.7	47.7	71.3	39.3	39.3	267	412	412
EAST	7.0	39.1	39.1	80.0	47.9	47.9	86	471	471